EXPLODED DRAWING—Model No. 831.297564
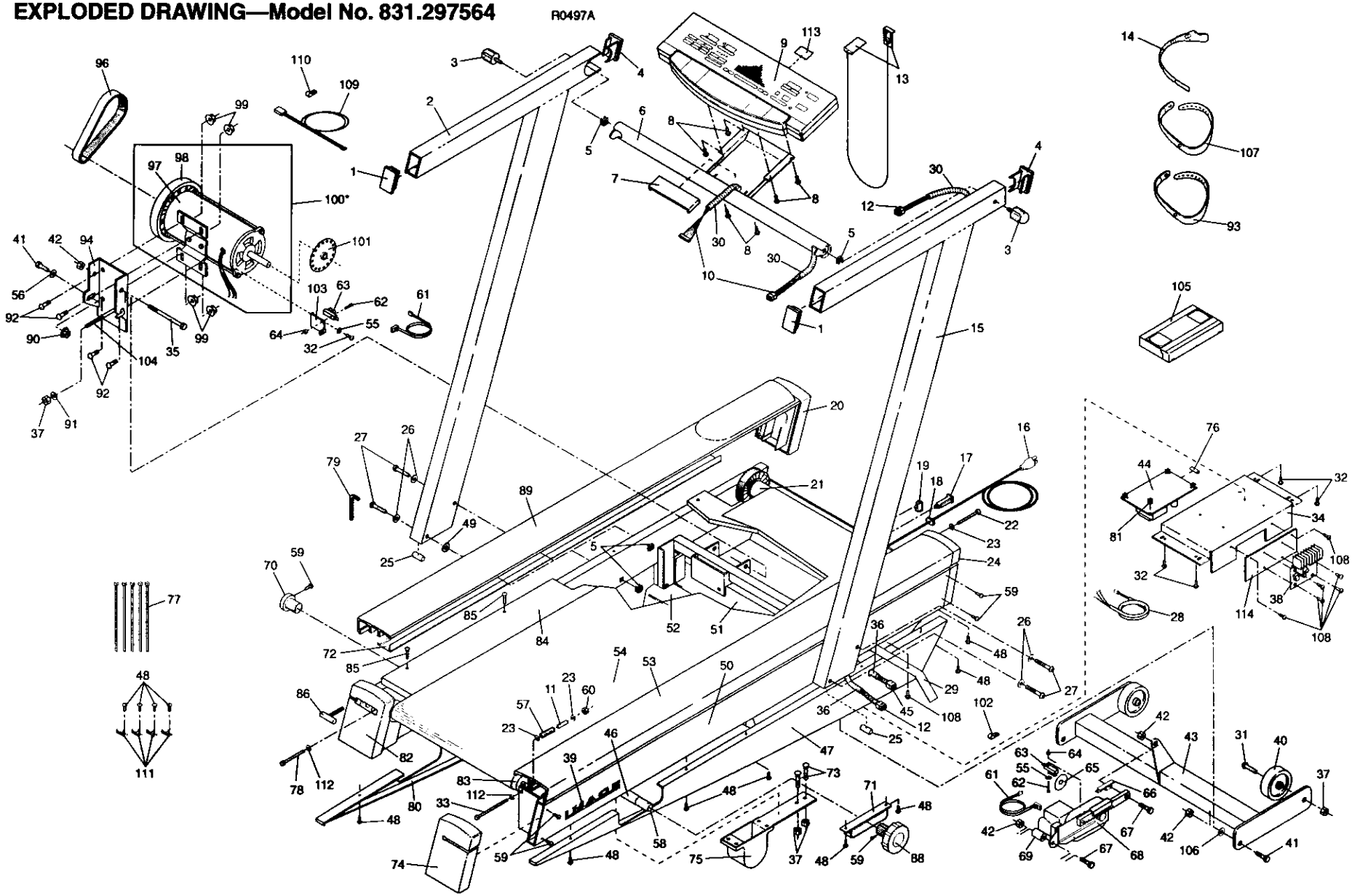
R0497A