EXPLODED DRAWING—Model No. 831.29763.0
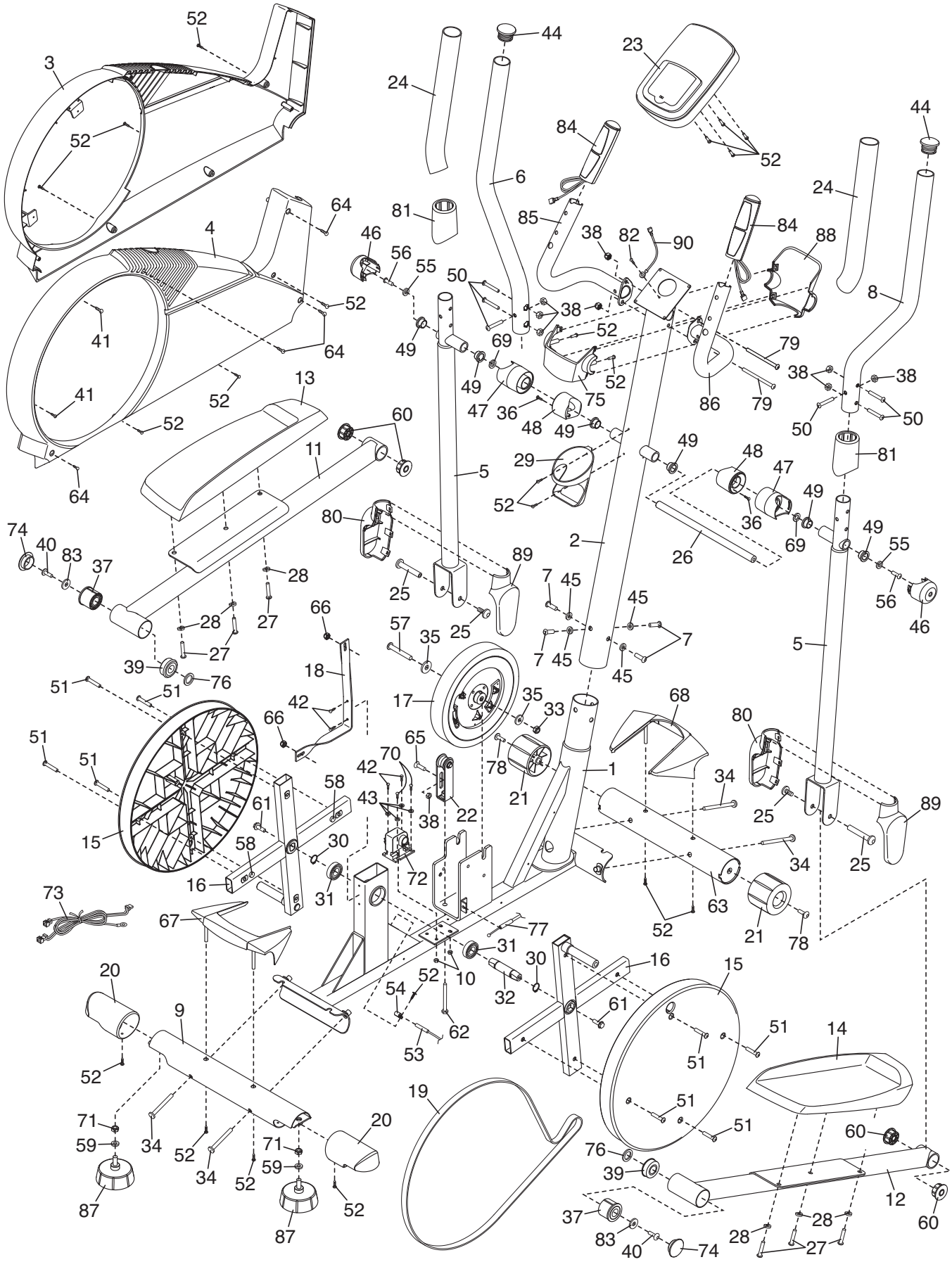
R0910A