# EXPLODED DRAWING—Model No. 831.297940

R1297A

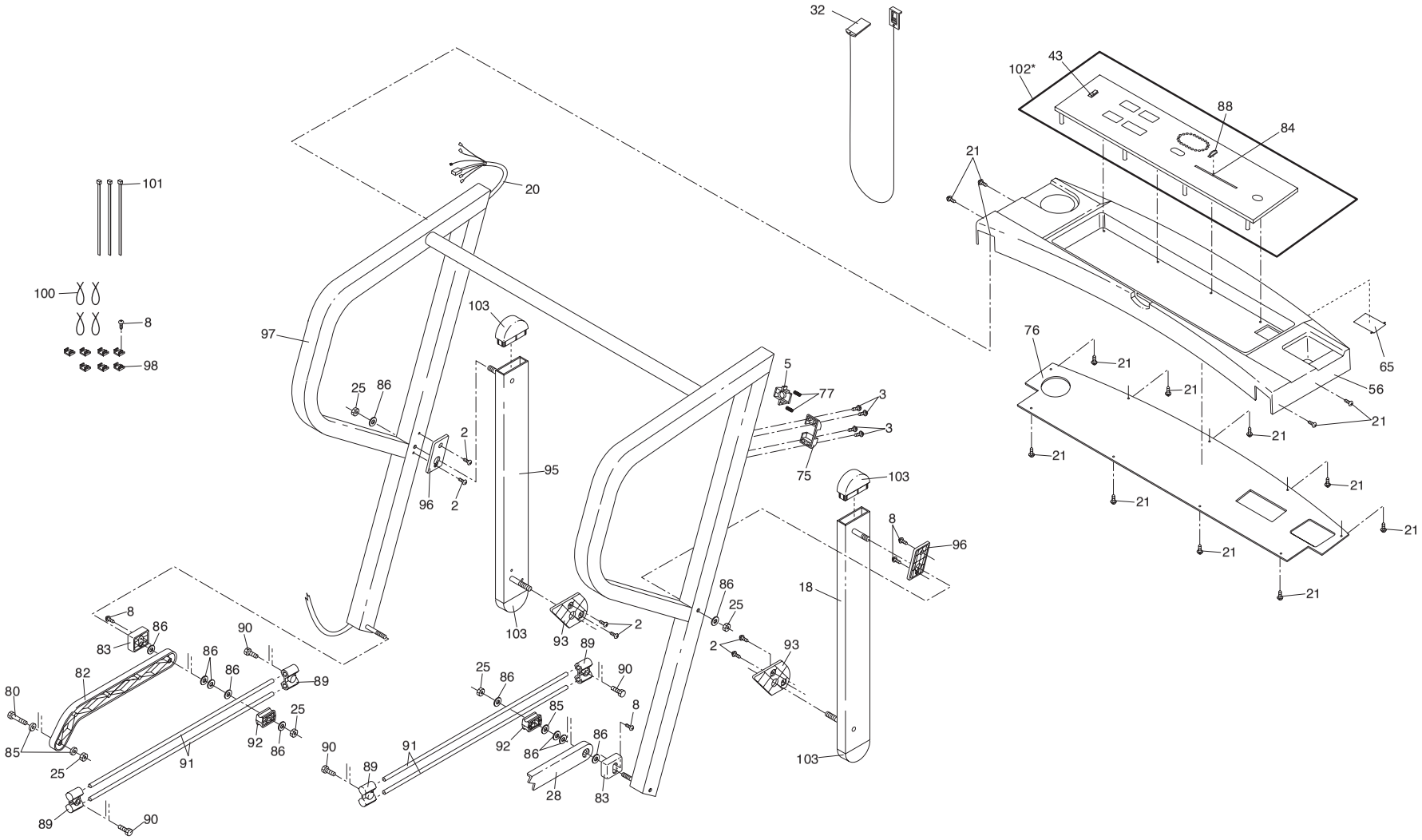

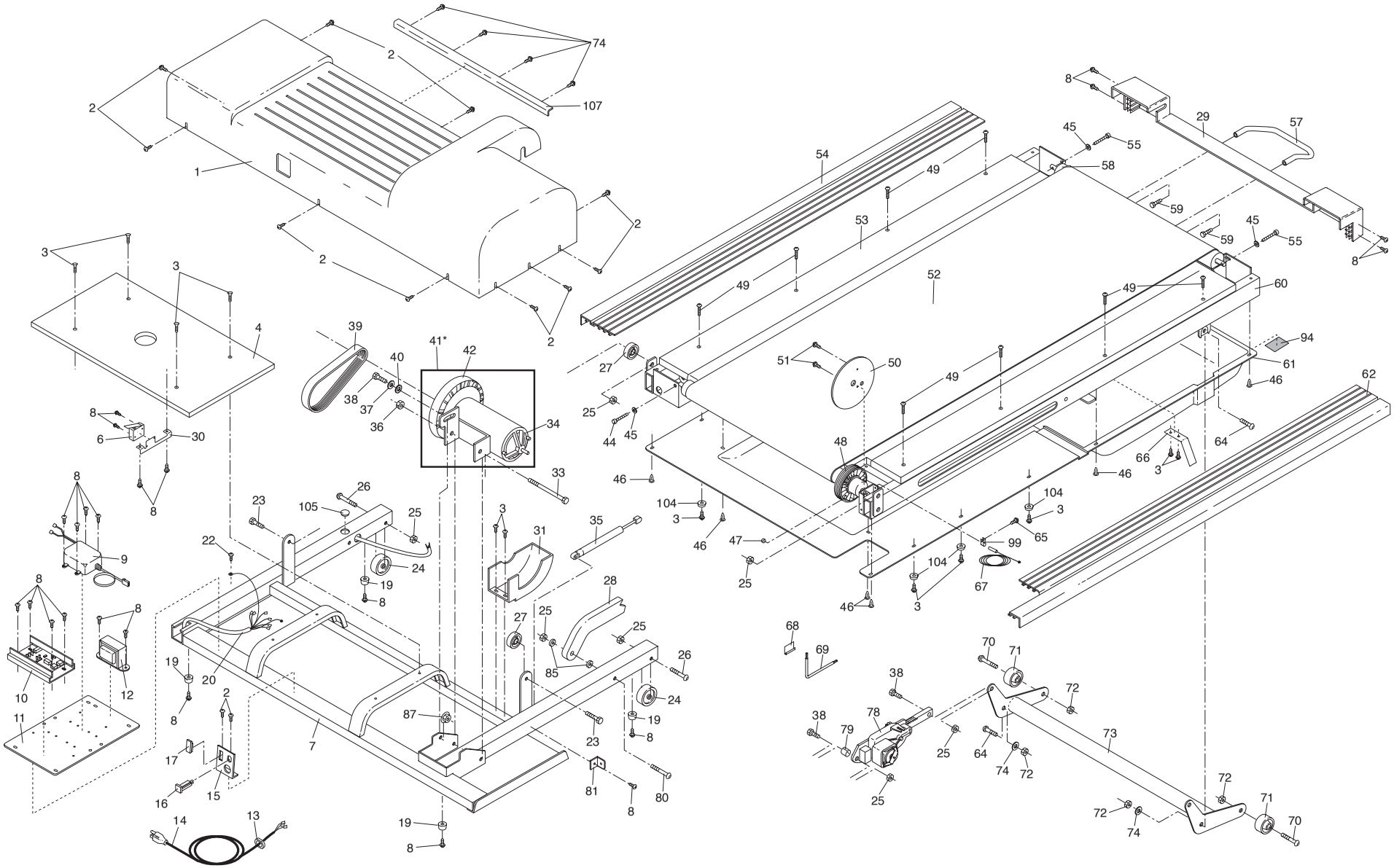
1
2
3
4
6
7
8
9
10
11
12
13
14
15
16
17
19
20
22
23
24
25
26
27
28
29
30
31
33
34
35
36
37
38
39
40
41*
42
44
45
46
47
48
49
50
51
52
53
54
55
57
58
59
60
61
62
64
65
66
67
68
69
70
71
72
73
74
78
79
80
81
85
87
94
99
104
105
107