EXPLODED DRAWING—Model No. 831.297982

R0399A

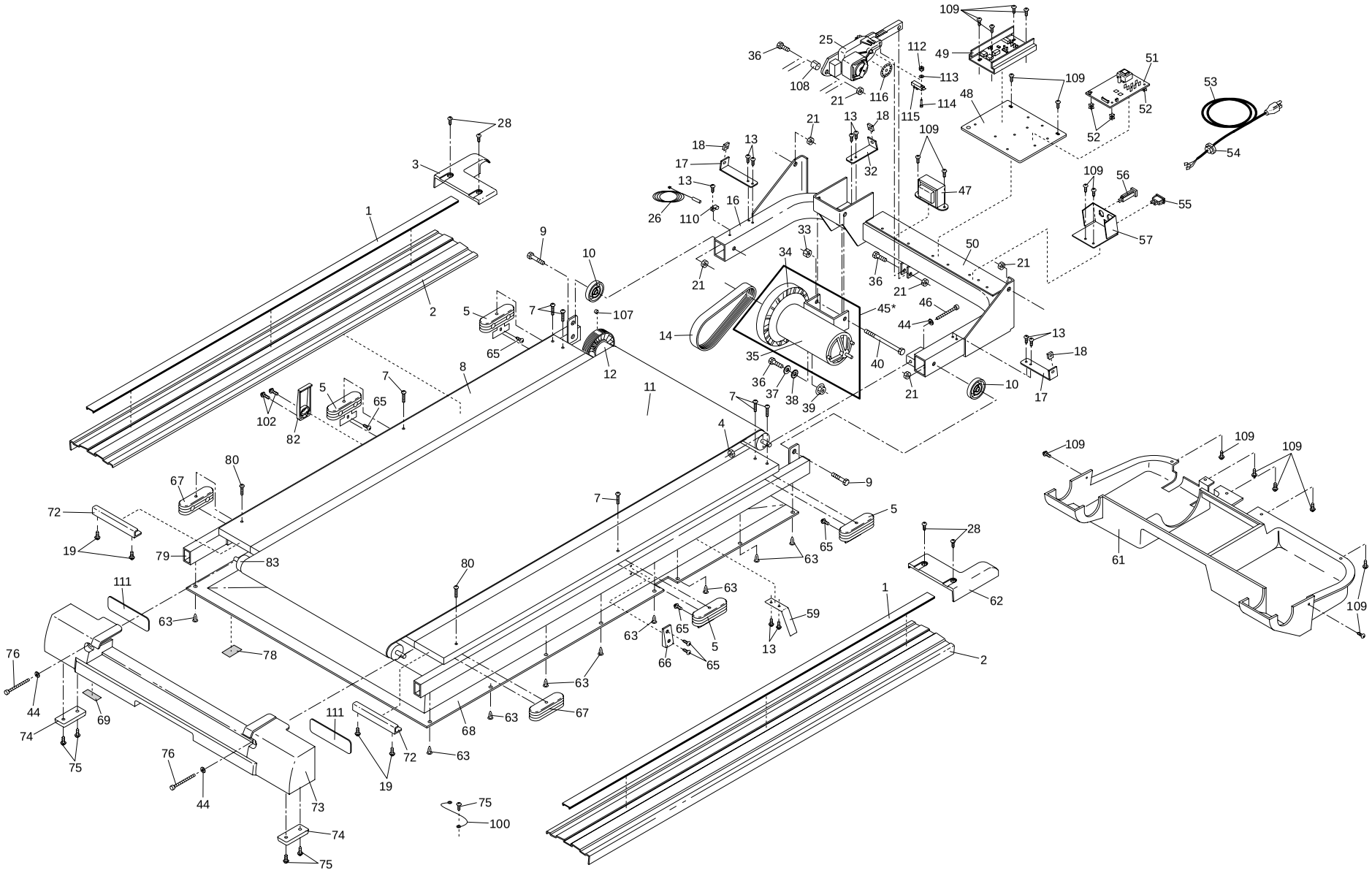

EXPLODED DRAWING—Model No. 831.297982
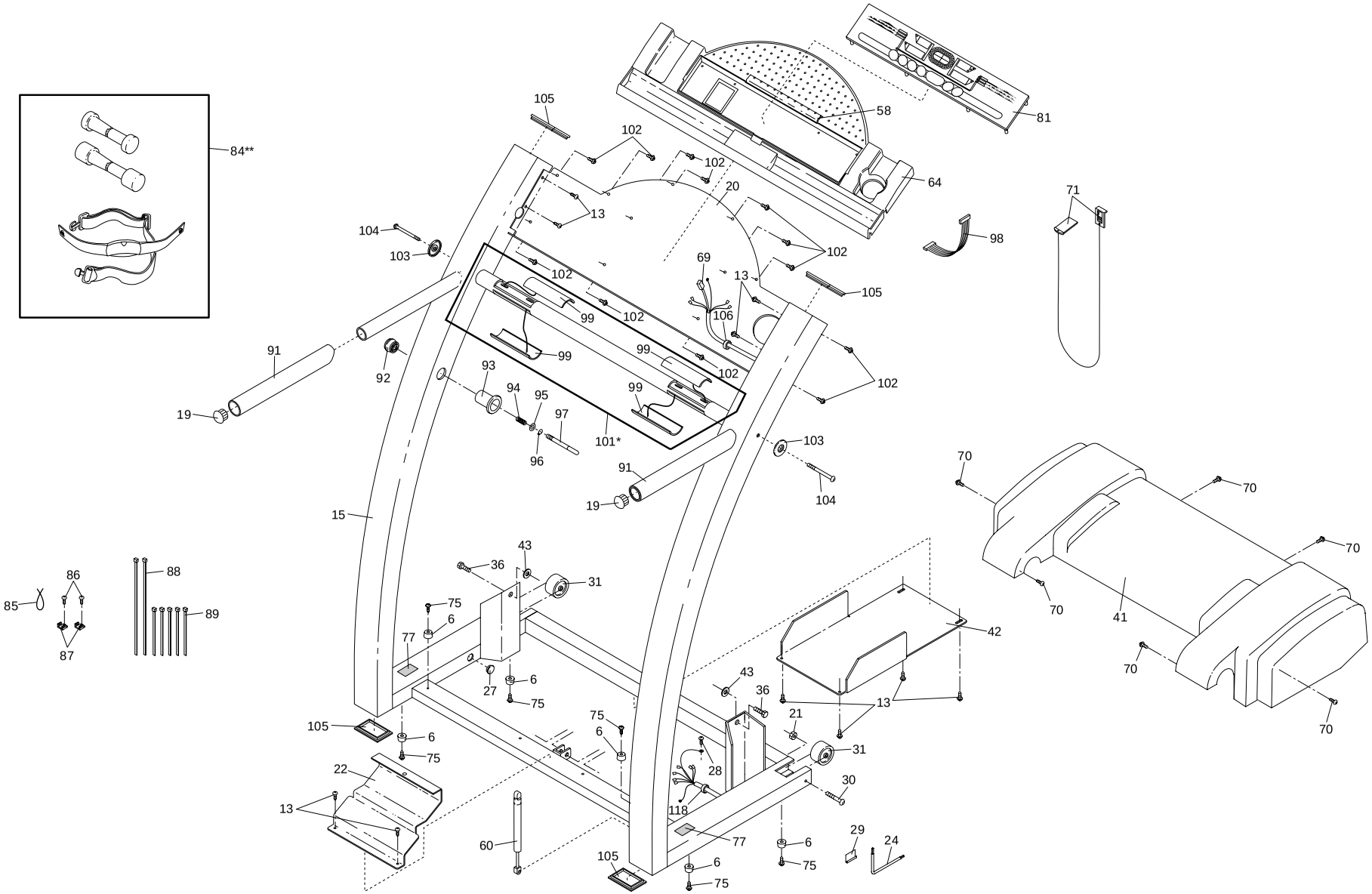
R0399A