EXPLODED DRAWING—Model No. NTTL09900

R0101A

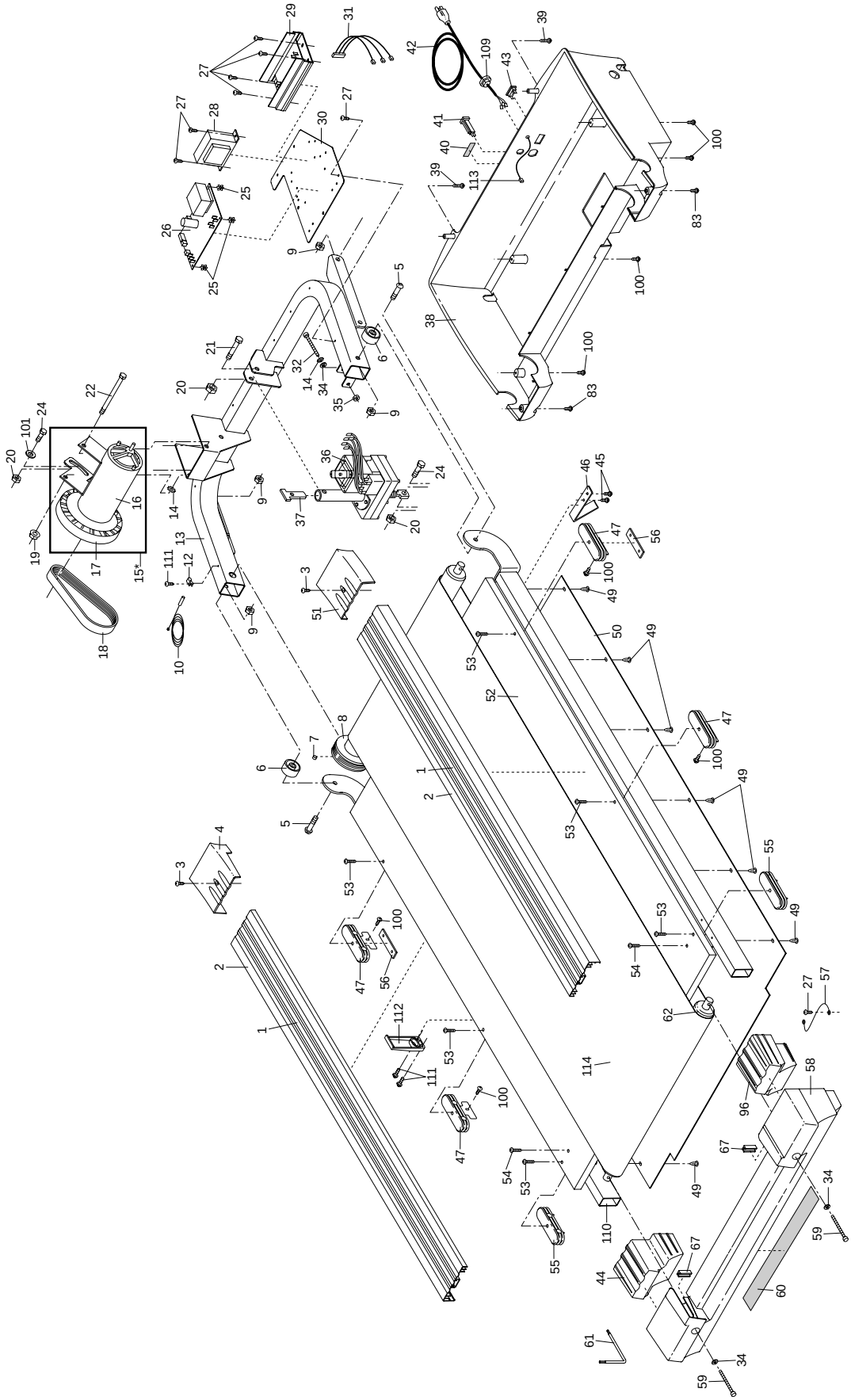

To identify the parts shown on this exploded drawing, refer to the PART LIST on pages 26 and 27 of the USER'S MANUAL.

EXPLODED DRAWING—Model No. NTTL09900
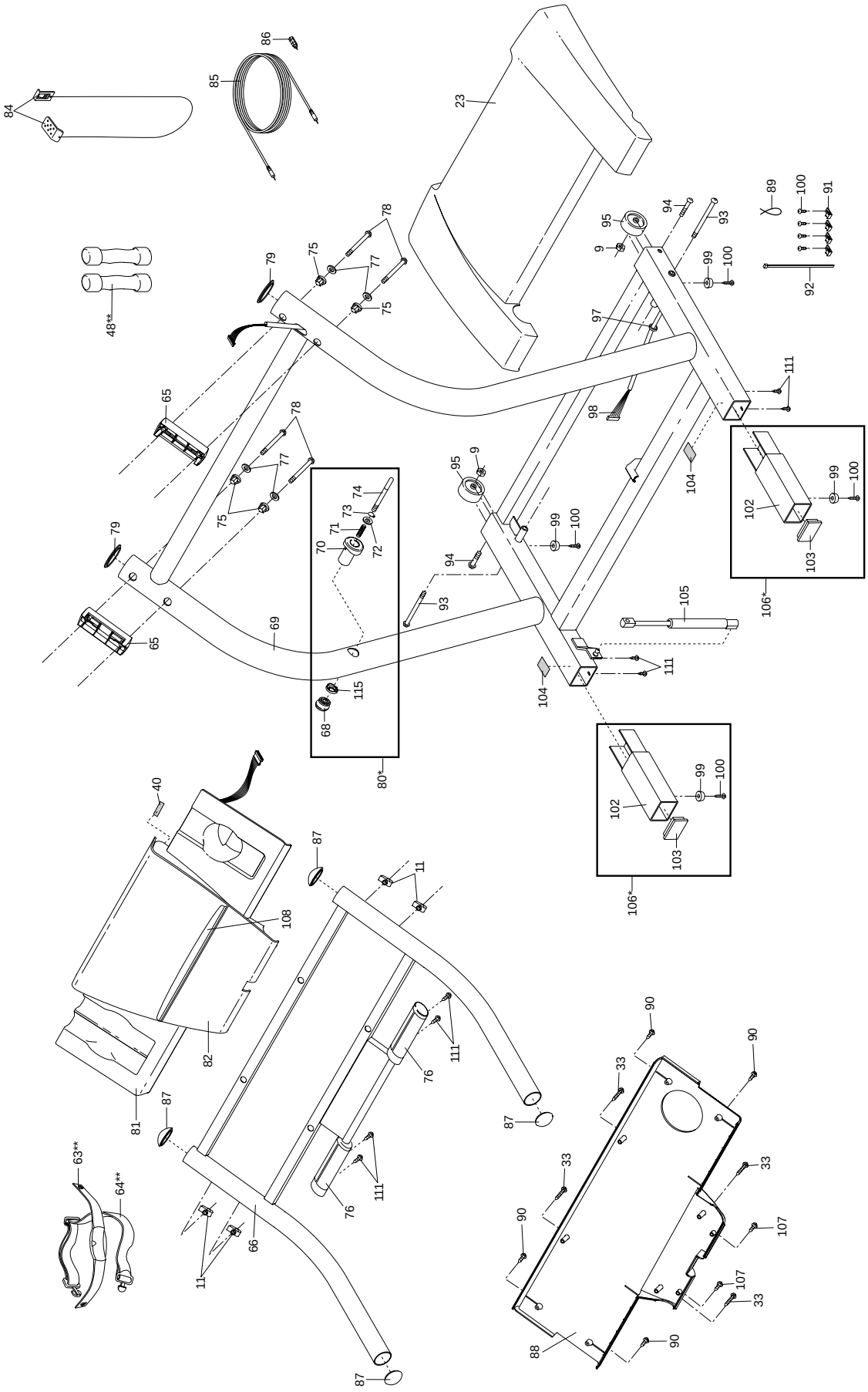
R0101A