EXPLODED DRAWING—Model No. 831.299480

R0800A

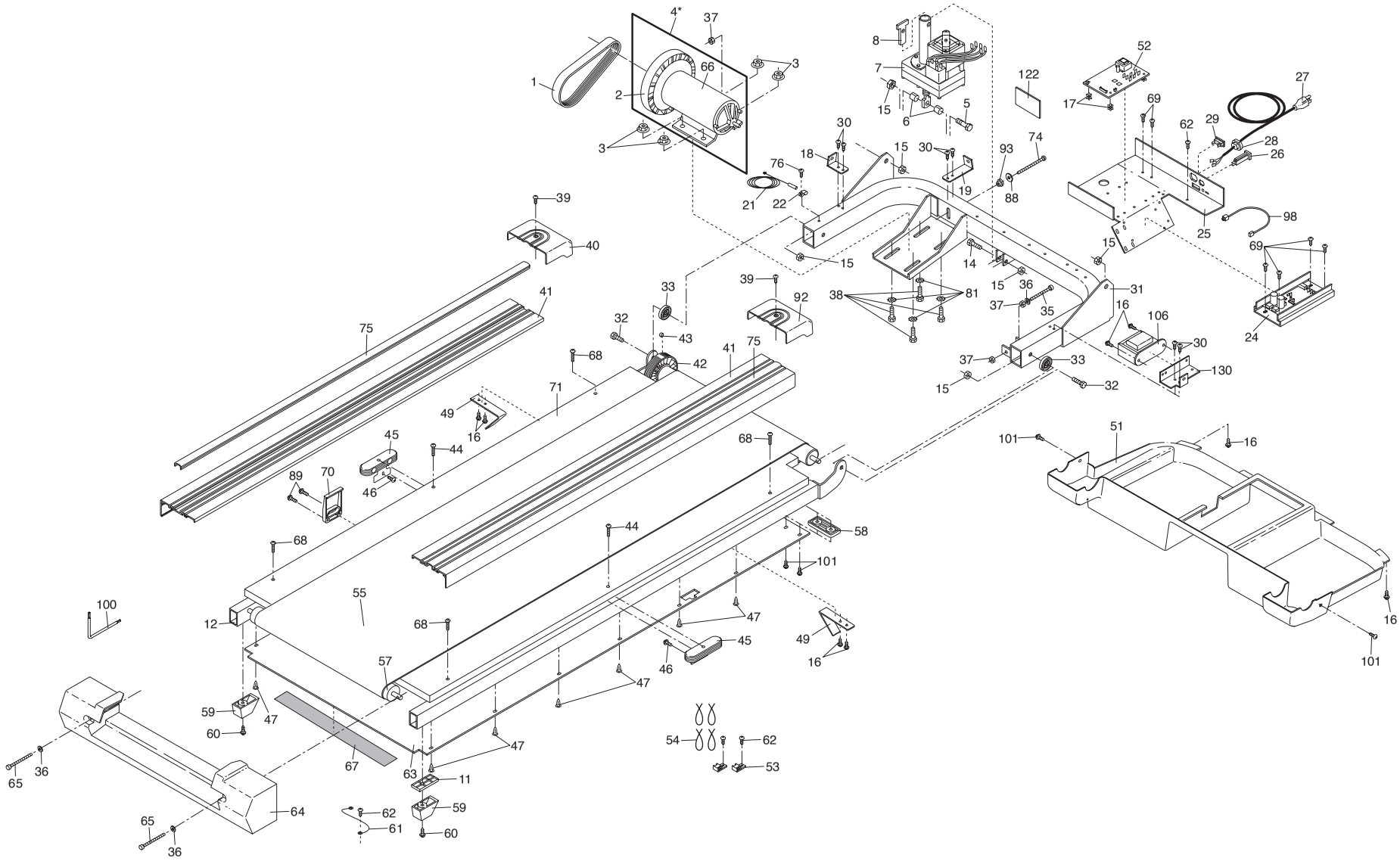

EXPLODED DRAWING—Model No. 831.299480
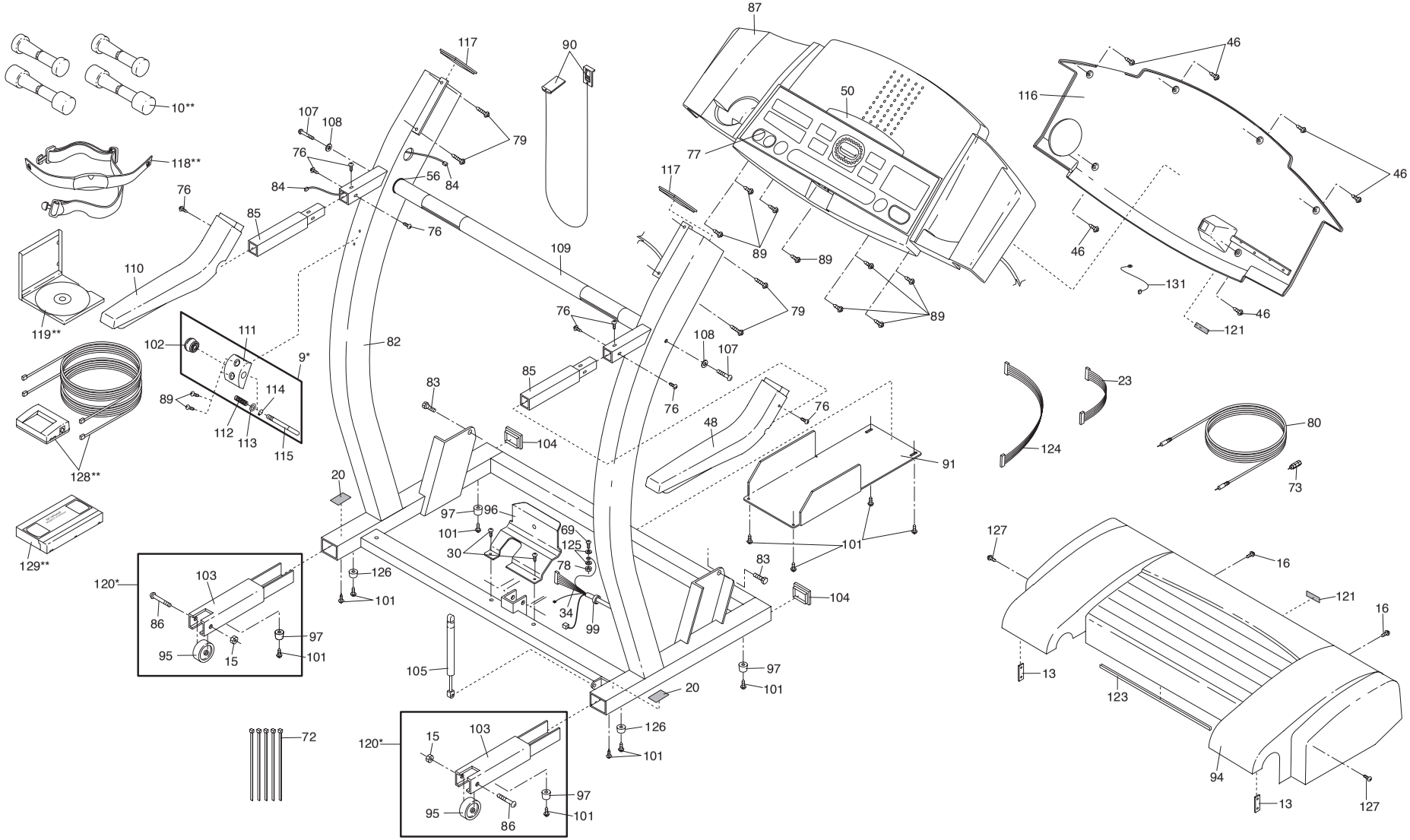
R0800A