EXPLODED DRAWING—Model No. 831.299560

R0501A

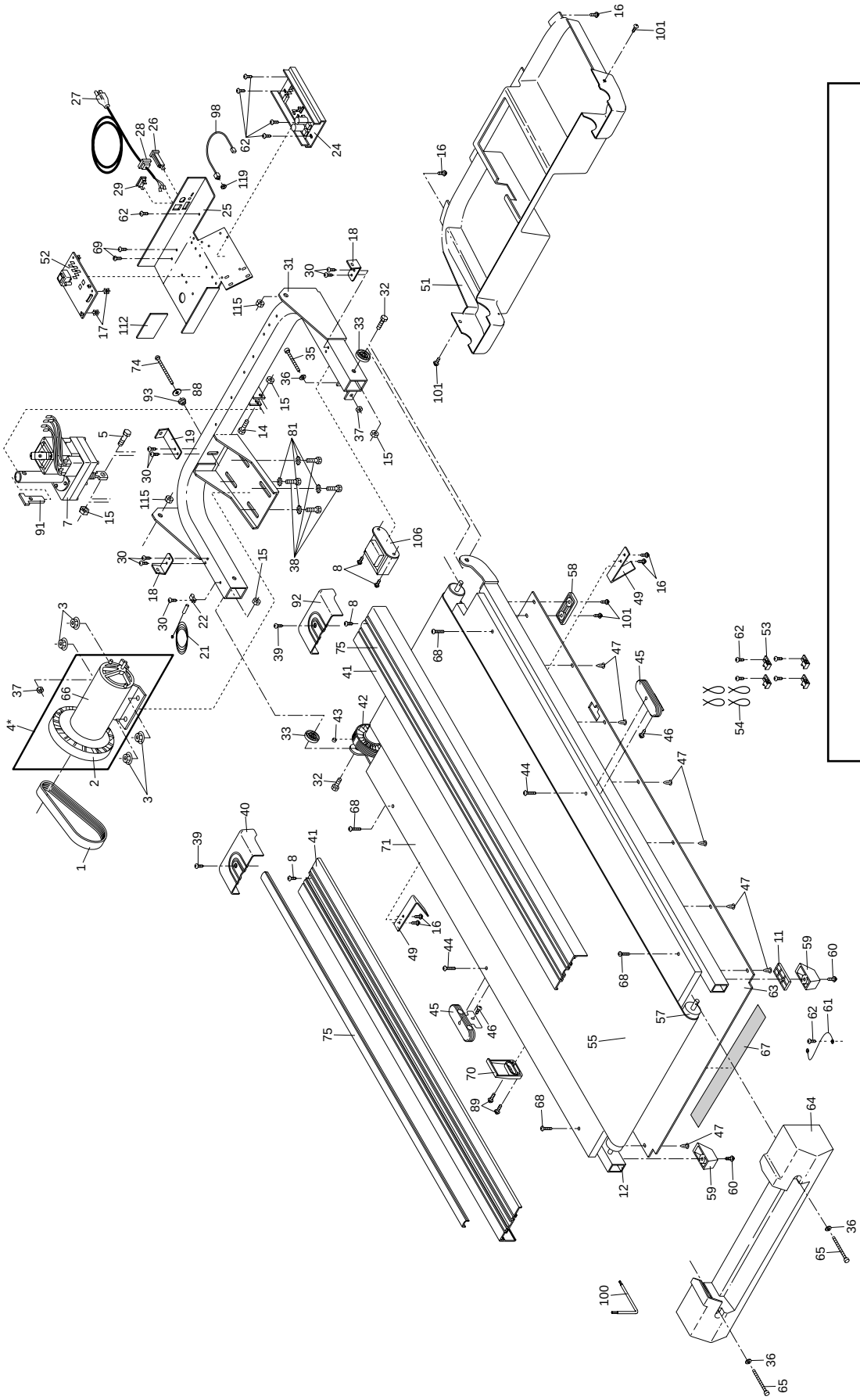

SAVE THE EXPLODED DRAWING FOR FUTURE REFERENCE.

To identify the parts shown on this exploded drawing, refer to the PART LIST on page 23 of the USER'S MANUAL.

EXPLODED DRAWING—Model No. 831.299560
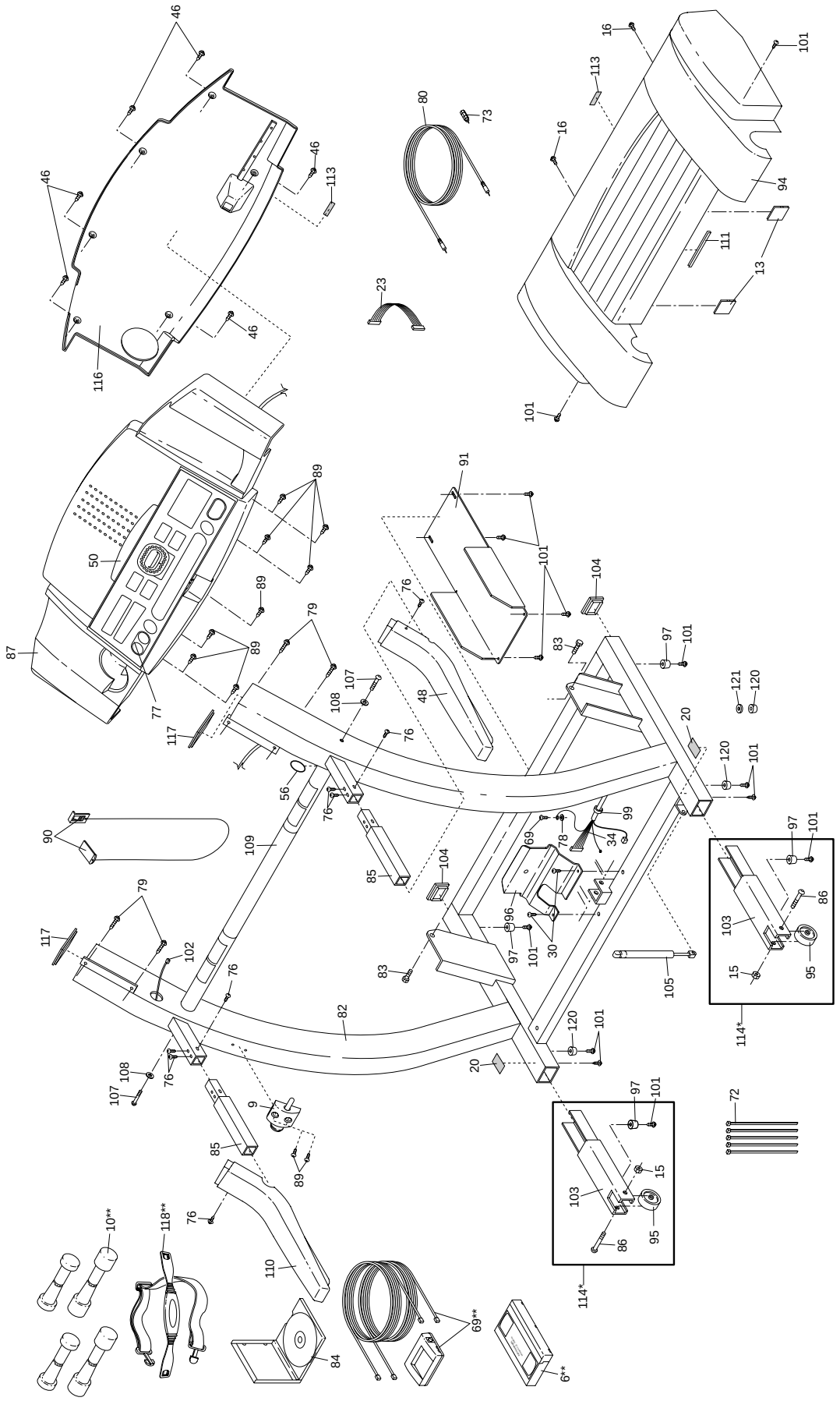
R0501A