EXPLODED DRAWING—Model No. AEVEX17008.0
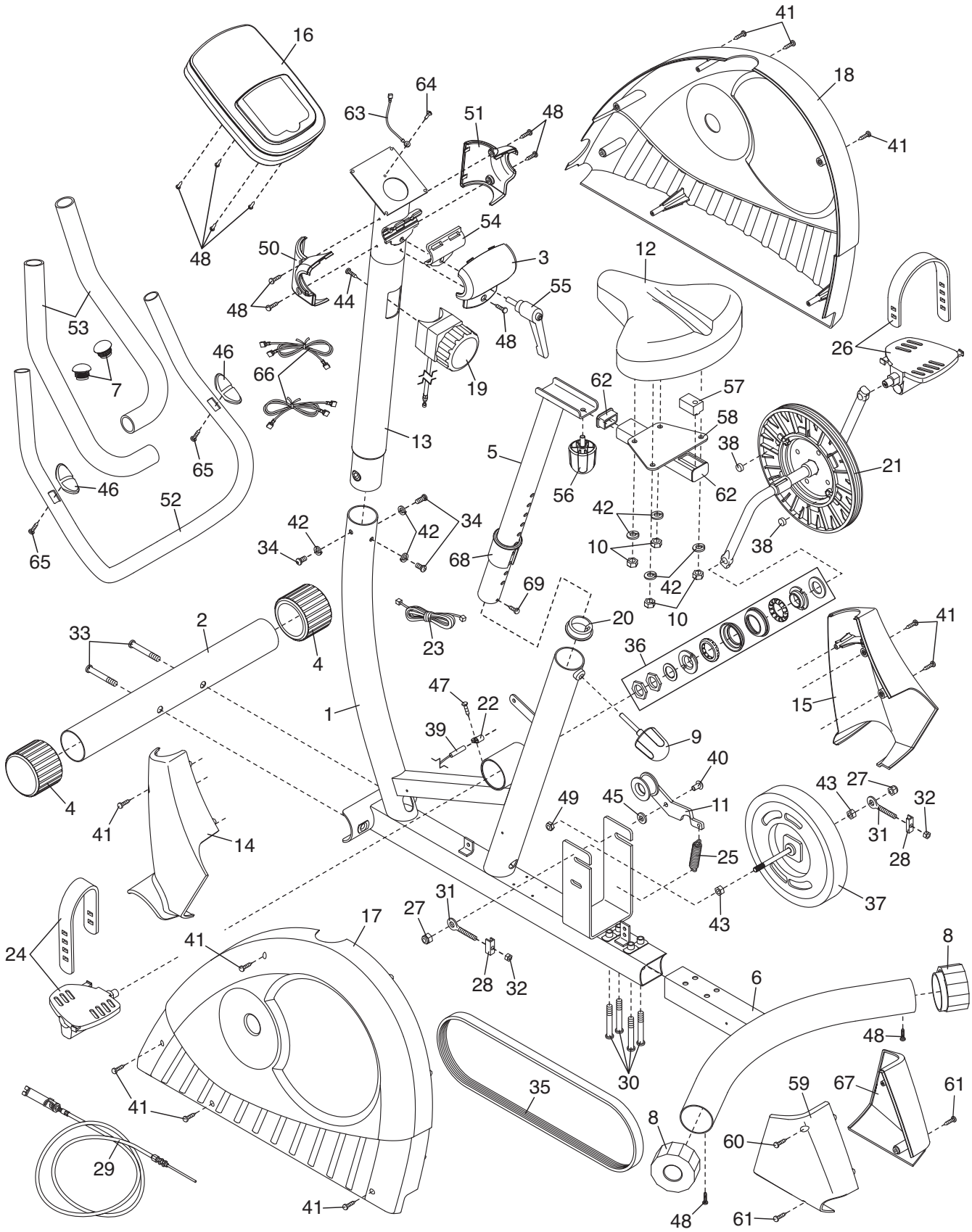
R1209B