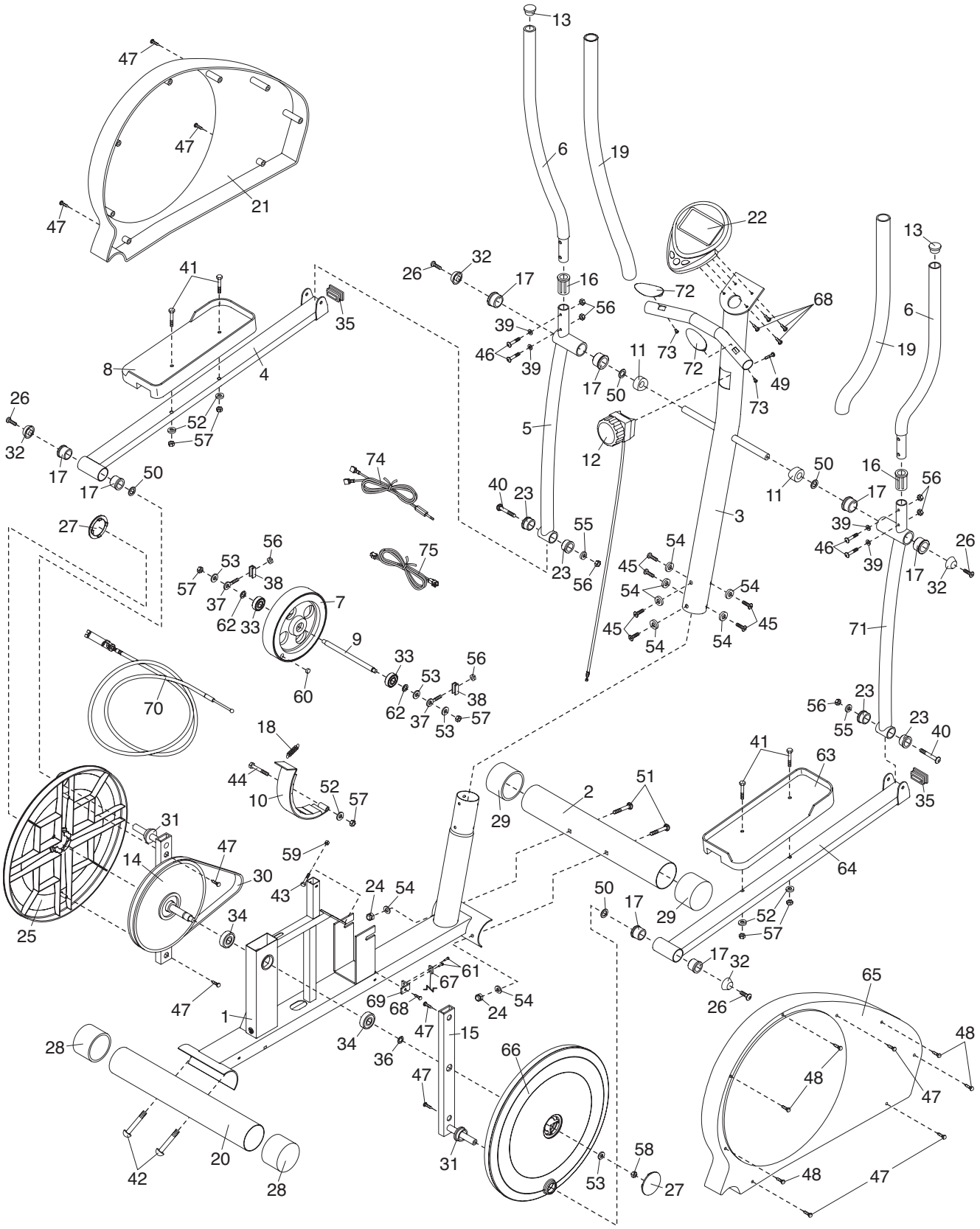EXPLODED DIAGRAM