TABLE OF CONTENTS
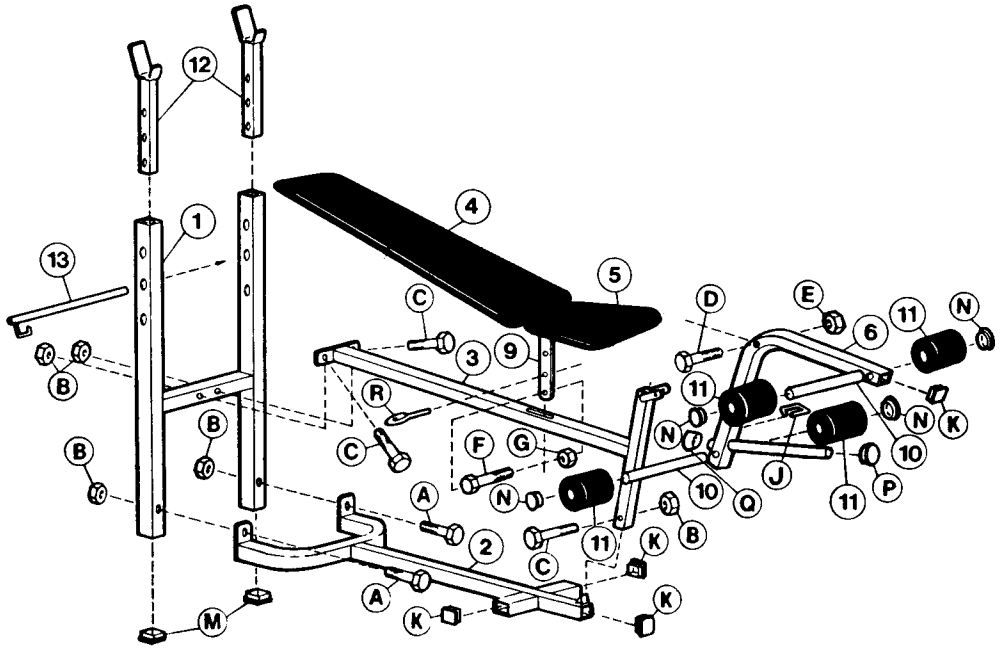
	PAGE
Diagram	1
Parts List	2
Repair Parts and Service	2
Hardware	3
Assembly Instructions	4
Step 1 Base Frame Assembly	4
Step 2 Main Frame Assembly	5
Step 3 Backrest and Seat Preparation	5
Step 4 Backrest and Seat	6
Step 5 Replacement of Short Angle Iron	6
Step 6 Leg Curl Assembly	7
Step 7 Completing Bench	7