EXPLODED DRAWING—Model No. PFEX59031

R1203A

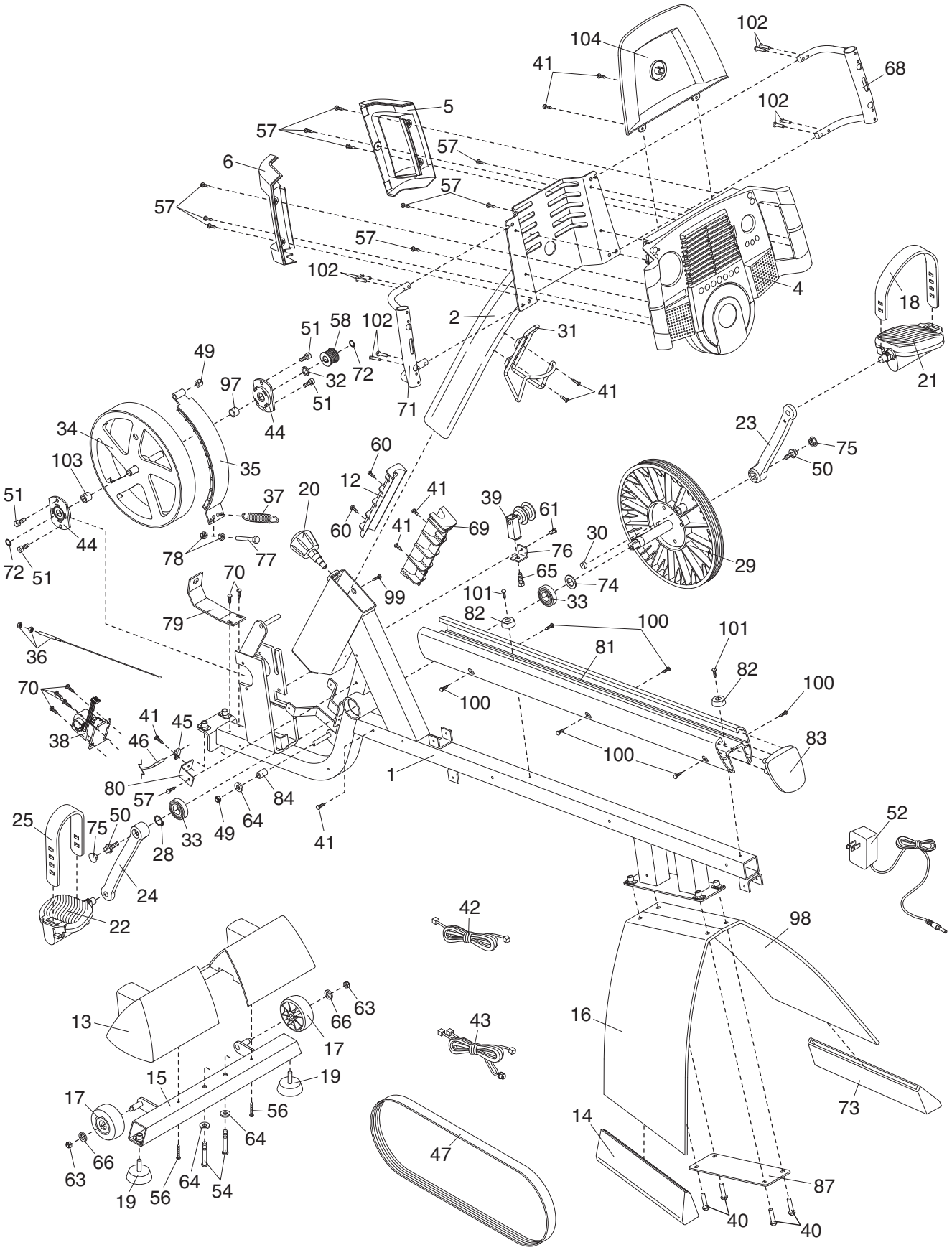

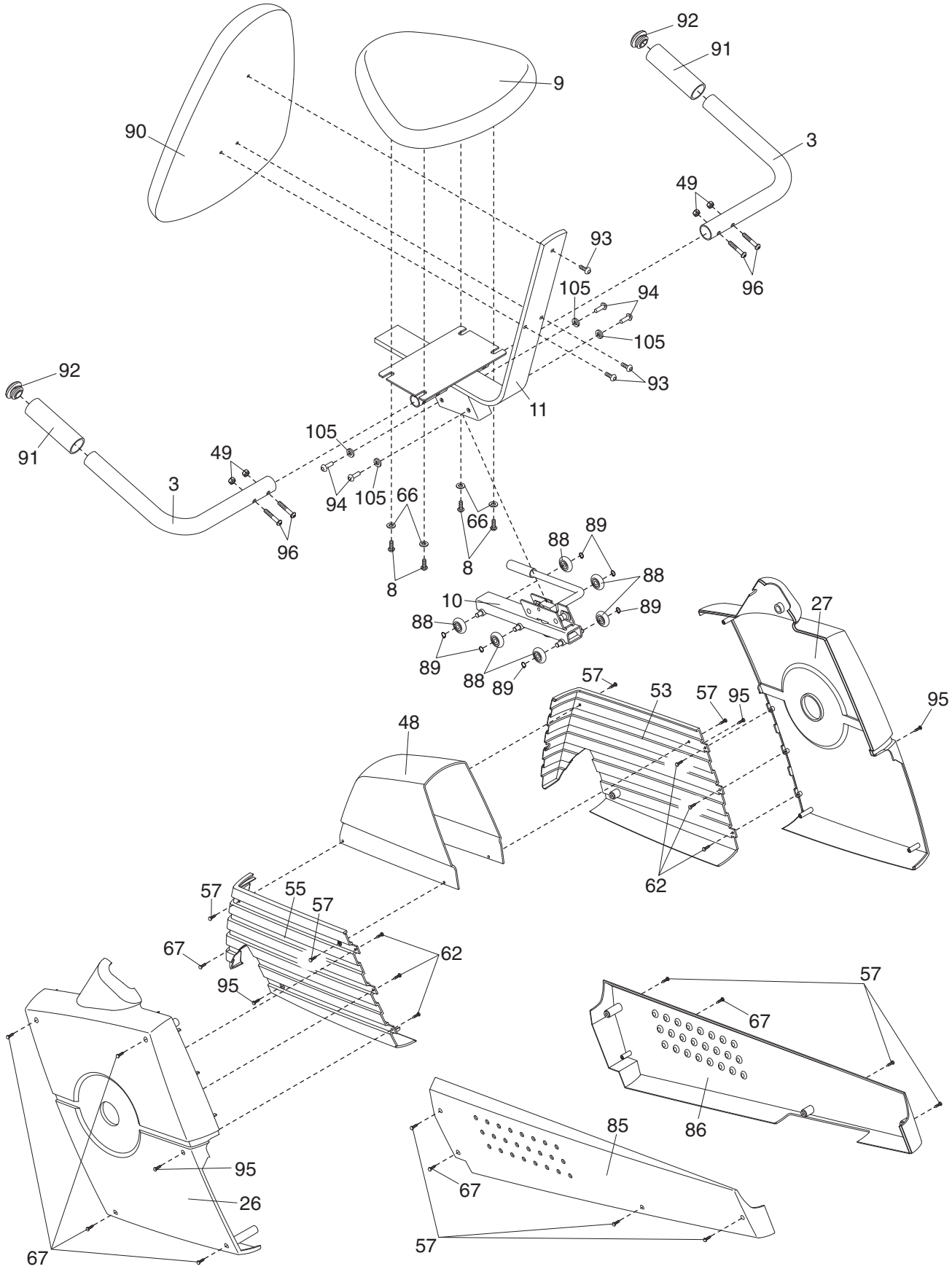
92
91
9
90
3
49
93
105
94
96
105
93
11
92
91
105
49
3
94
105
66
66
96
8
8
88
89
88
10
89
88
89
88
89
27
57
53
57
95
95
48
62
57
55
57
67
62
95
57
67
86
85
95
26
67
67
57