EXPLODED DRAWING—Model No. DTL92941

R0304A

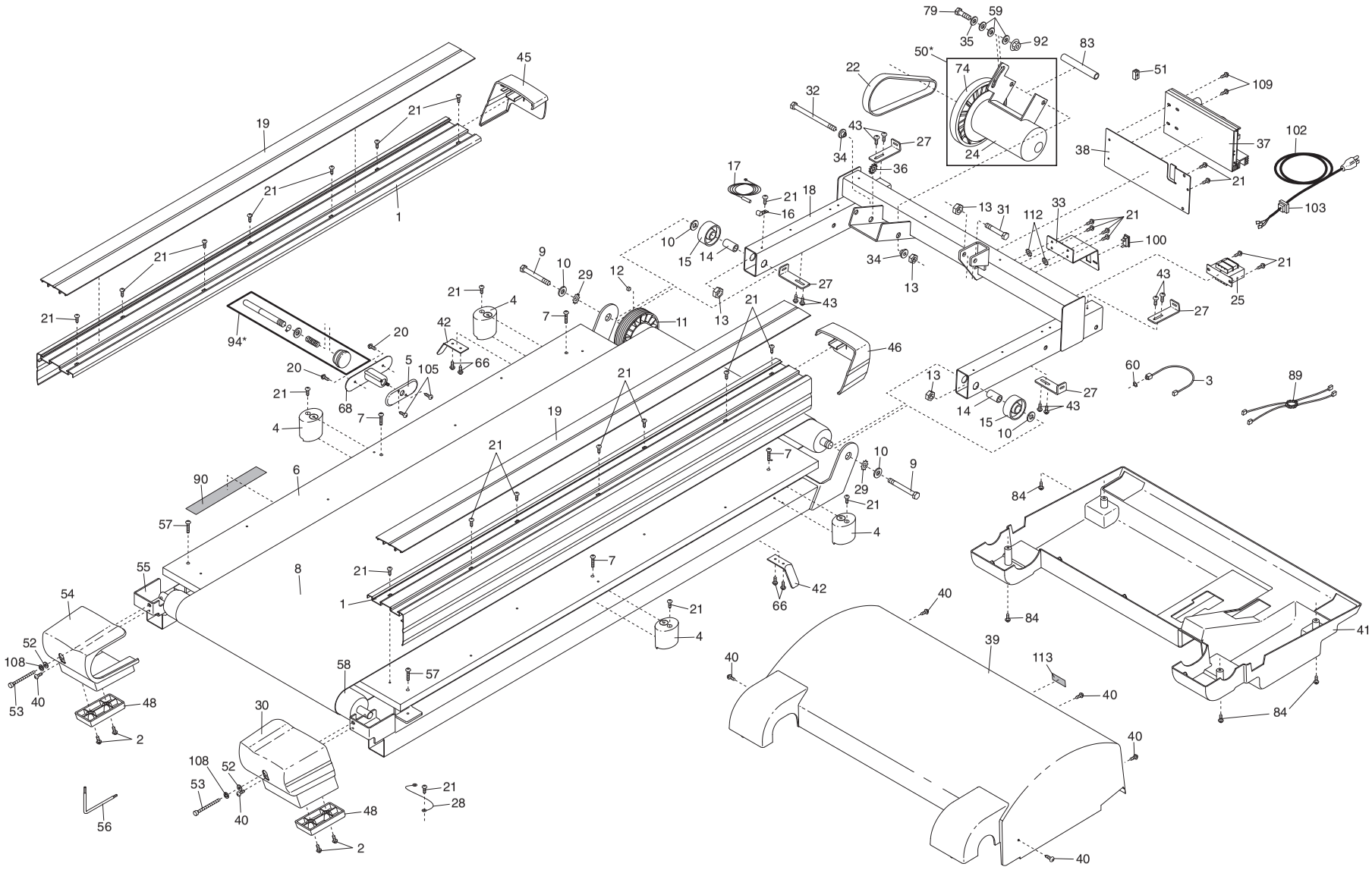

EXPLODED DRAWING—Model No. DTL92941
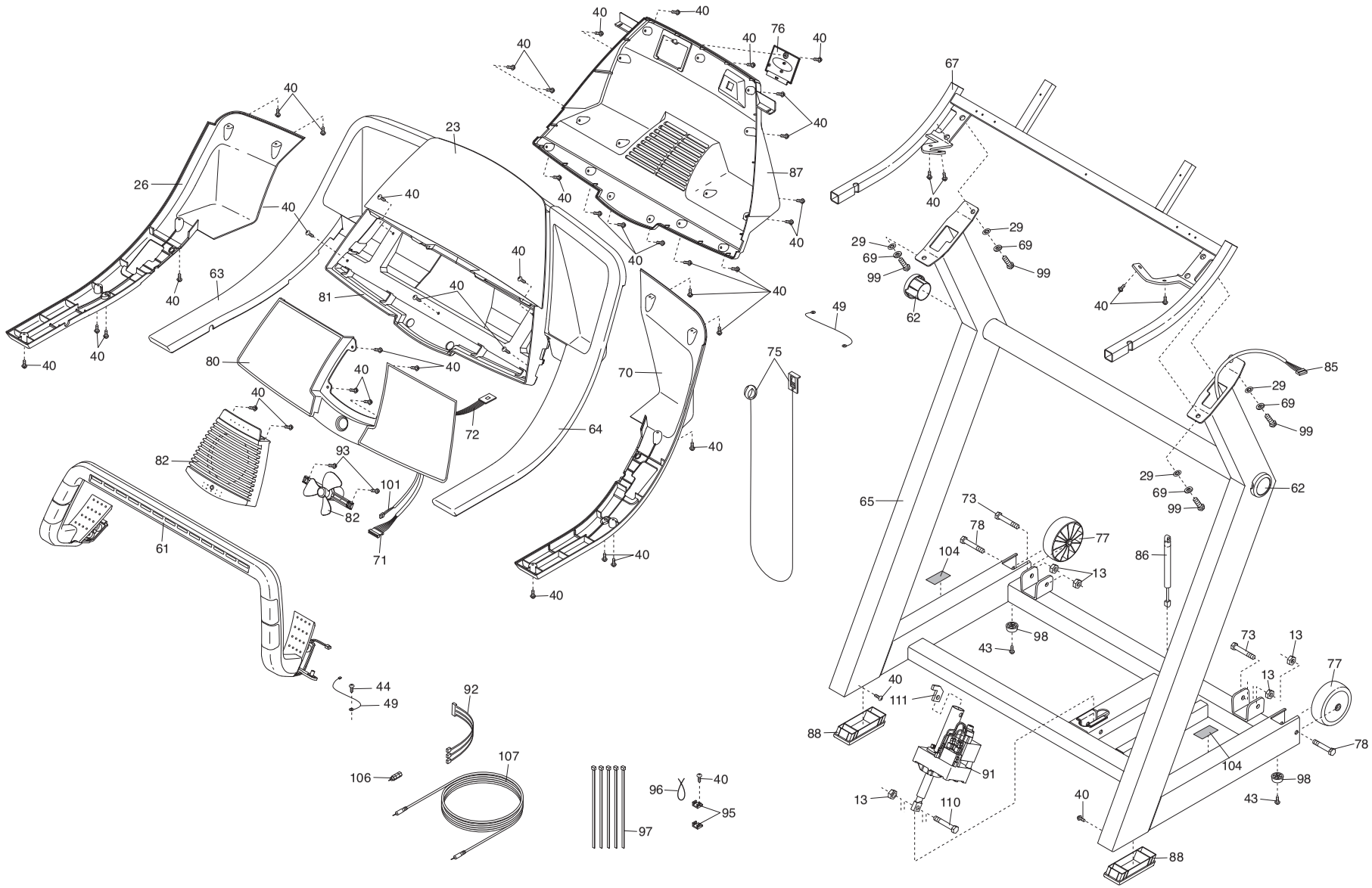
R0304A