TABLE OF CONTENTS
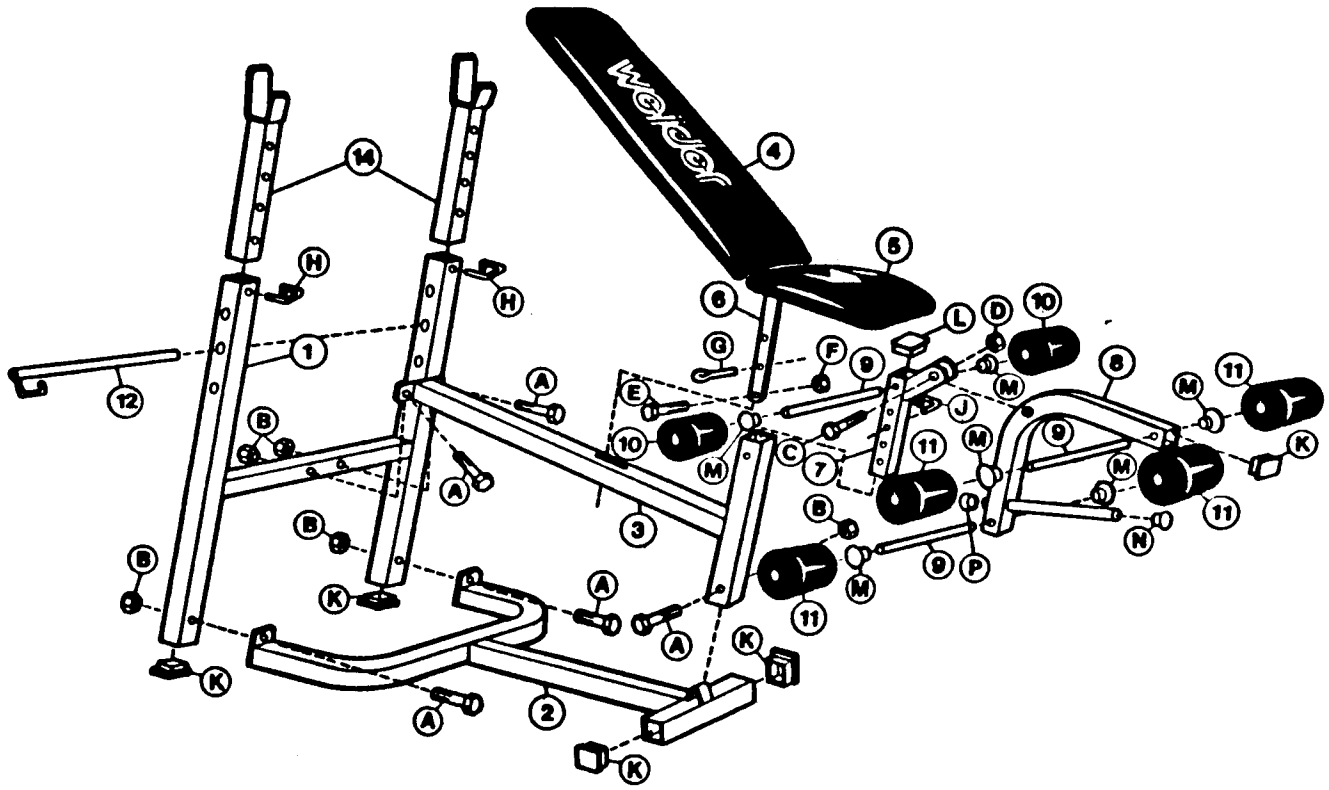
	PAGE
Diagram	1
Parts List	2
Repair Parts and Service	2
Step 1 Frame Assembly	3
Step 2 Backrest & Seat Preparation	3
Step 3 Connecting Seat to Main Frame	4
Step 4 Replacement of Short Angle Iron	4
Step 5 Leg Curl Assembly	5
Step 6 Leg Curl	5
Step 7 Adjustable Uprights & Locking Pins	6