EXPLODED DRAWING A

Model No. FMEL84410.2 R0213B

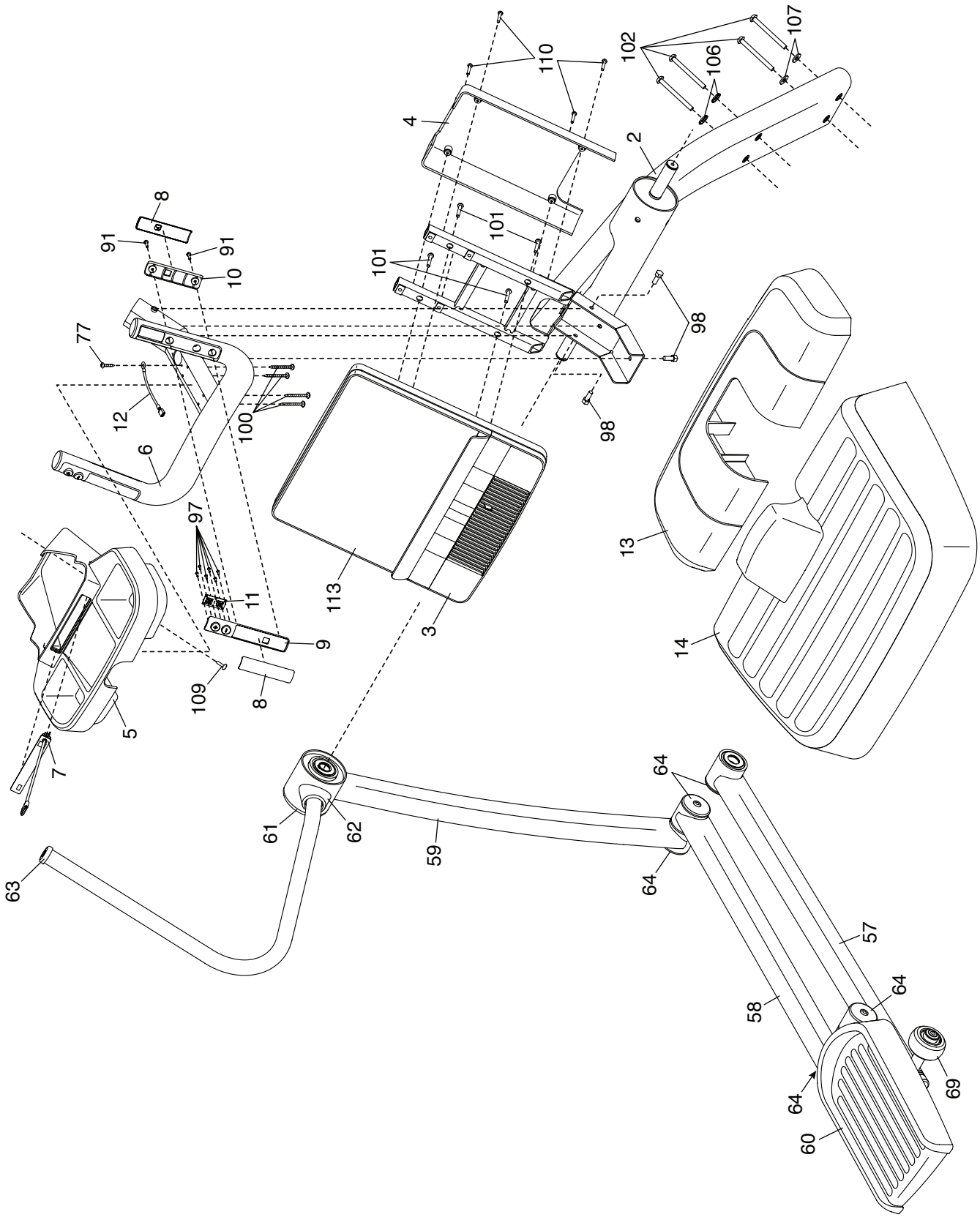

EXPLODED DRAWING B

Model No. FMEL84410.2 R0213B

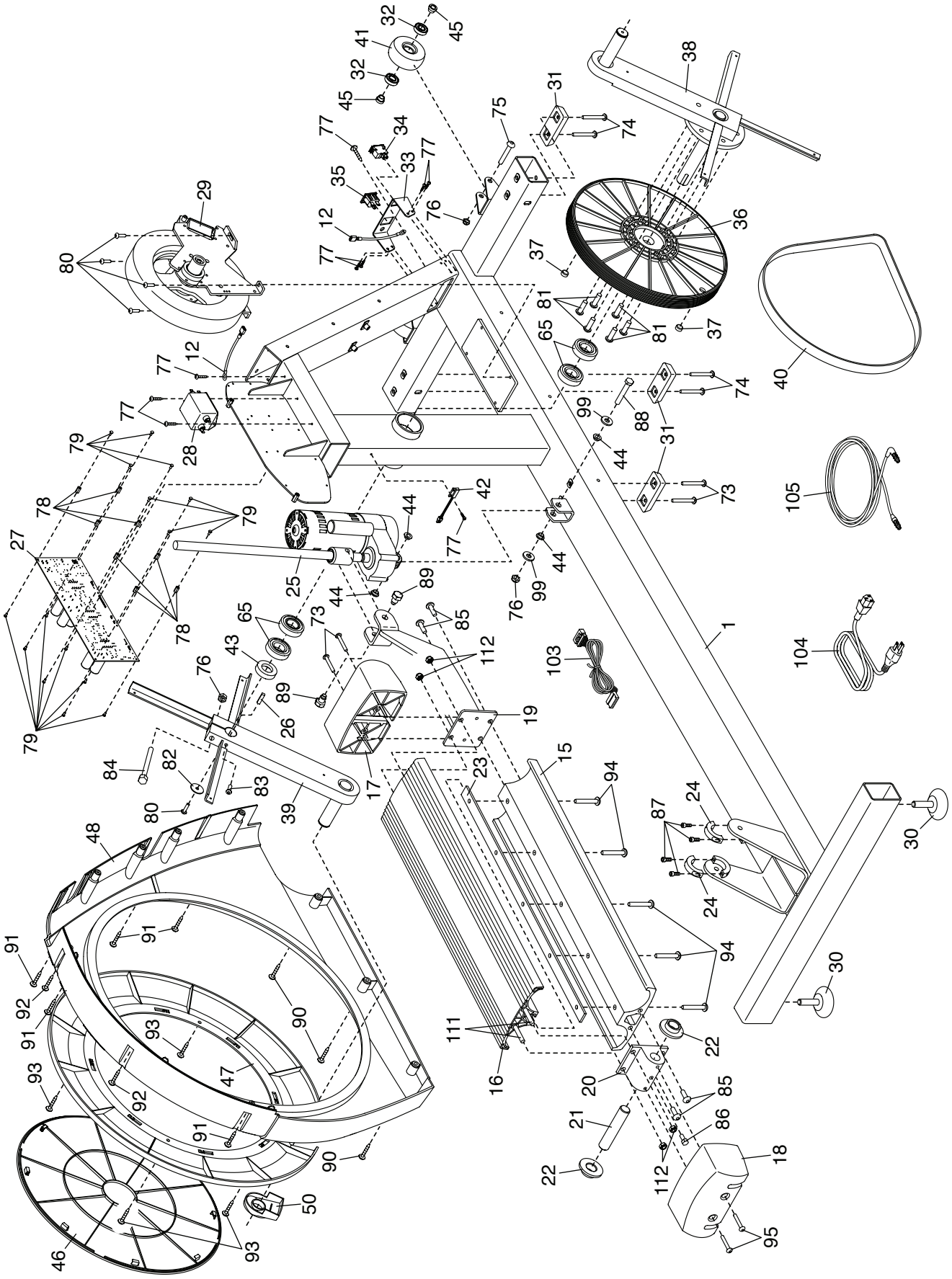

EXPLODED DRAWING C
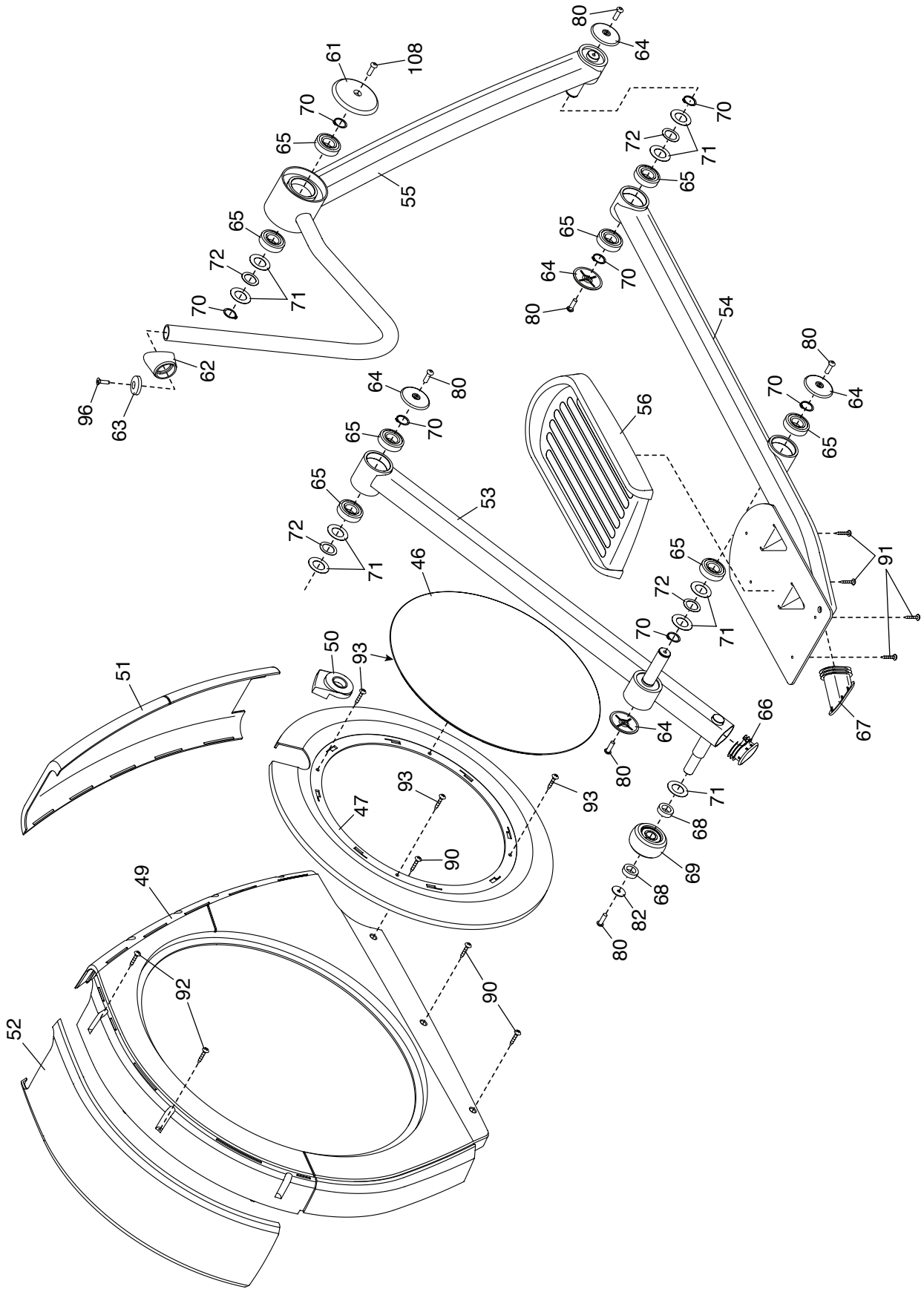
Model No. FMEL84410.2 R0213B