EXPLODED DRAWING A

R1208A

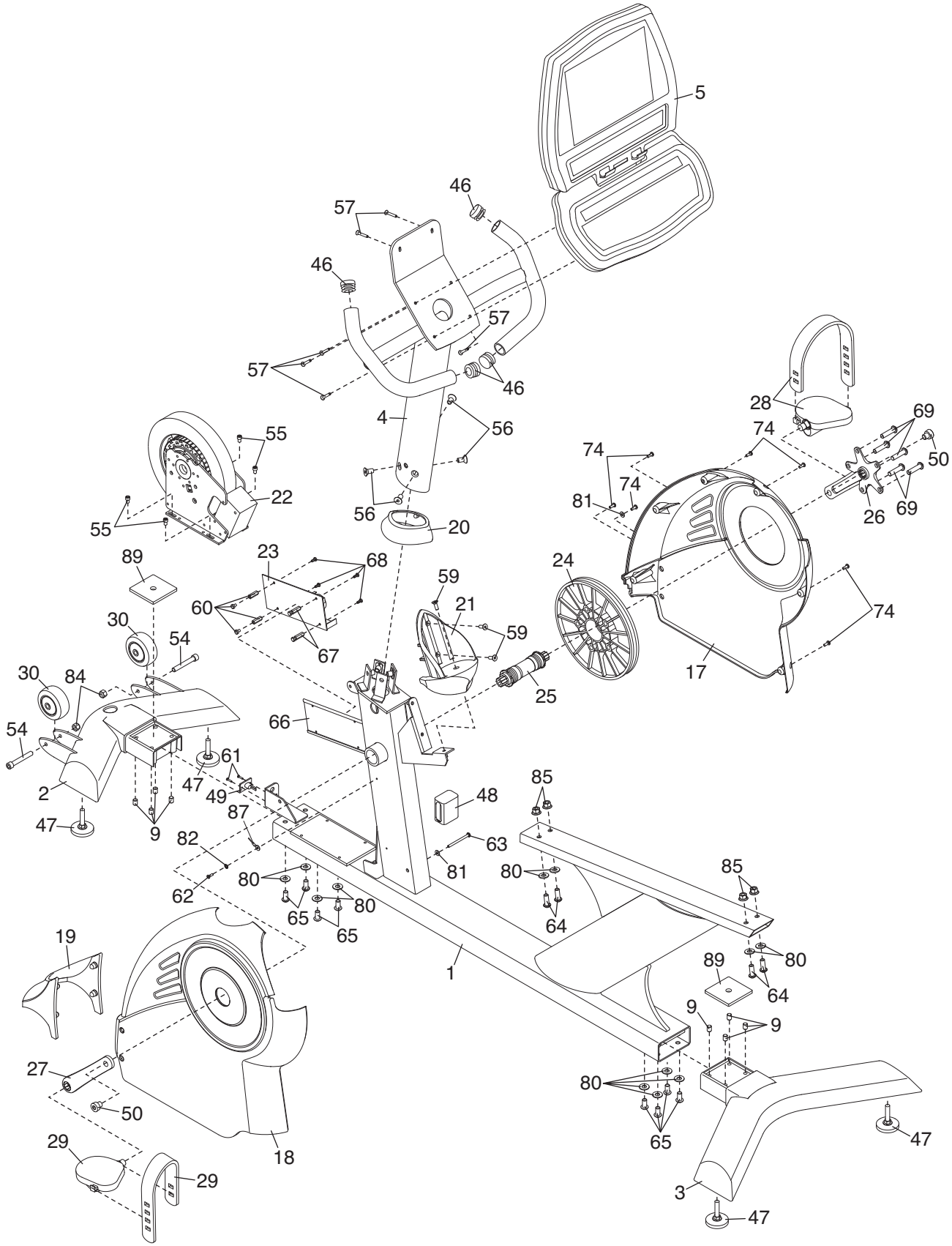

EXPLODED DRAWING B
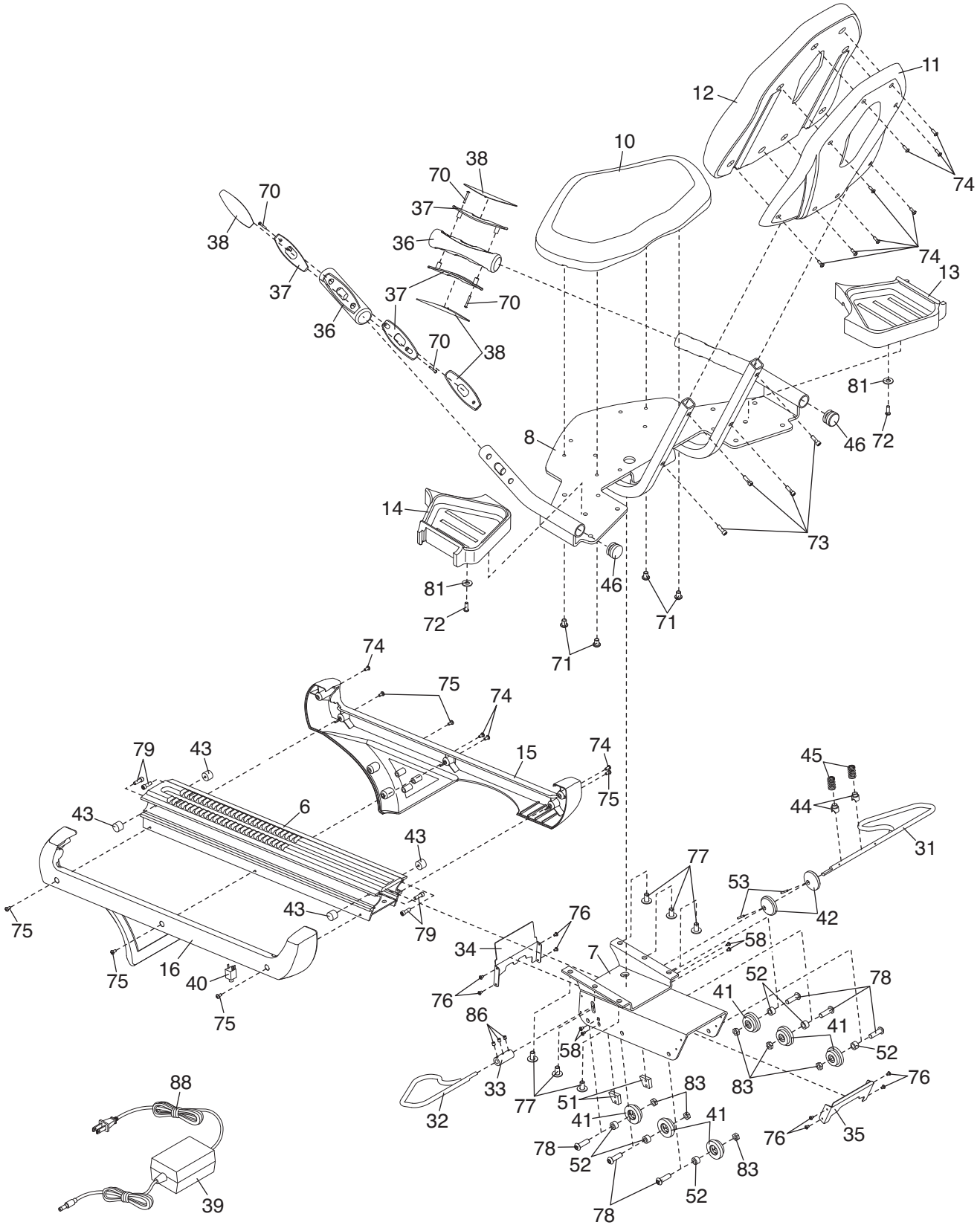
R1208A