EXPLODED DRAWING
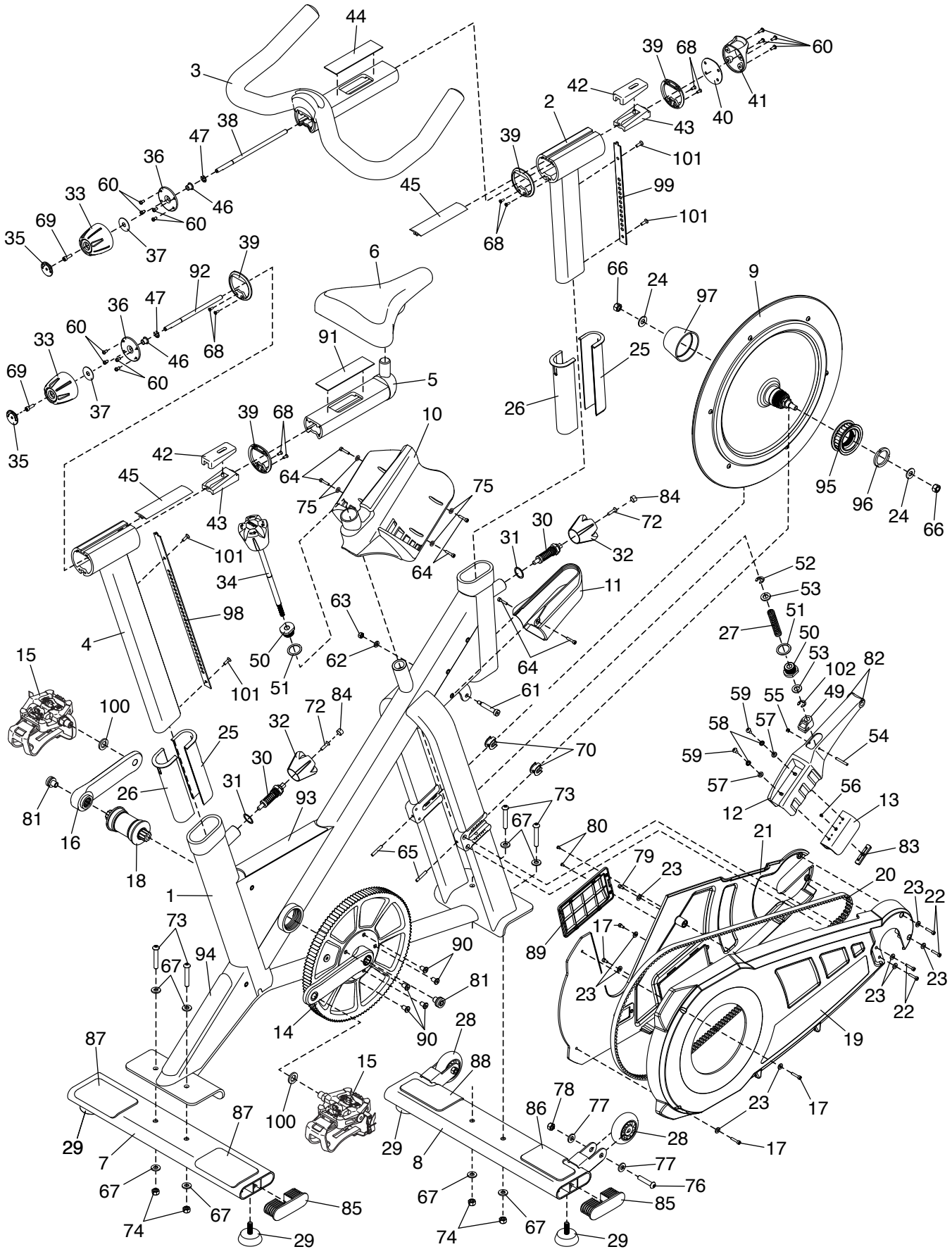
Model No. FMEX91412.1 R0817A