EXPLODED DRAWING—Model No. FMSY14230

R1003A

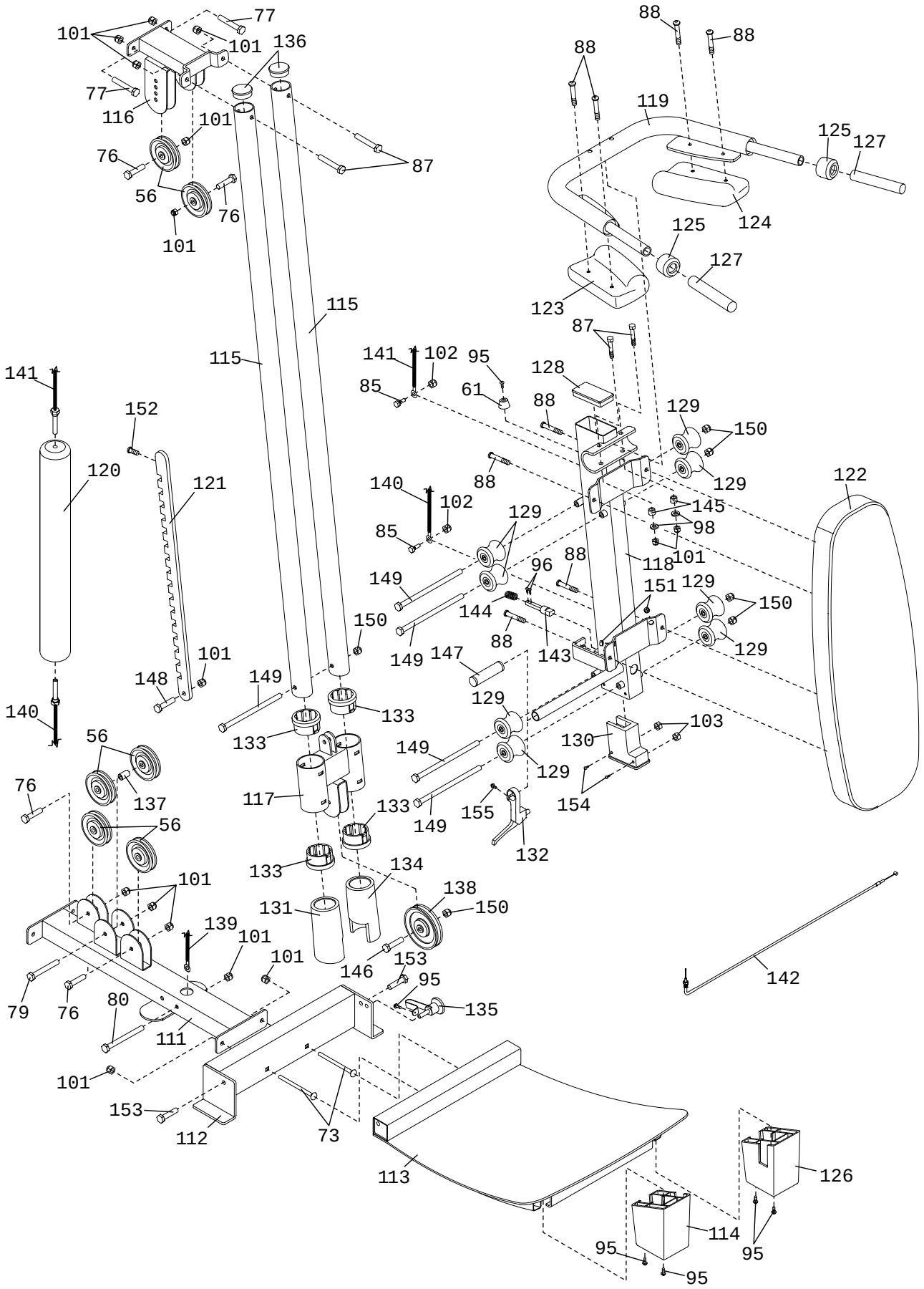

EXPLODED DRAWING—Model No. FMSY14230
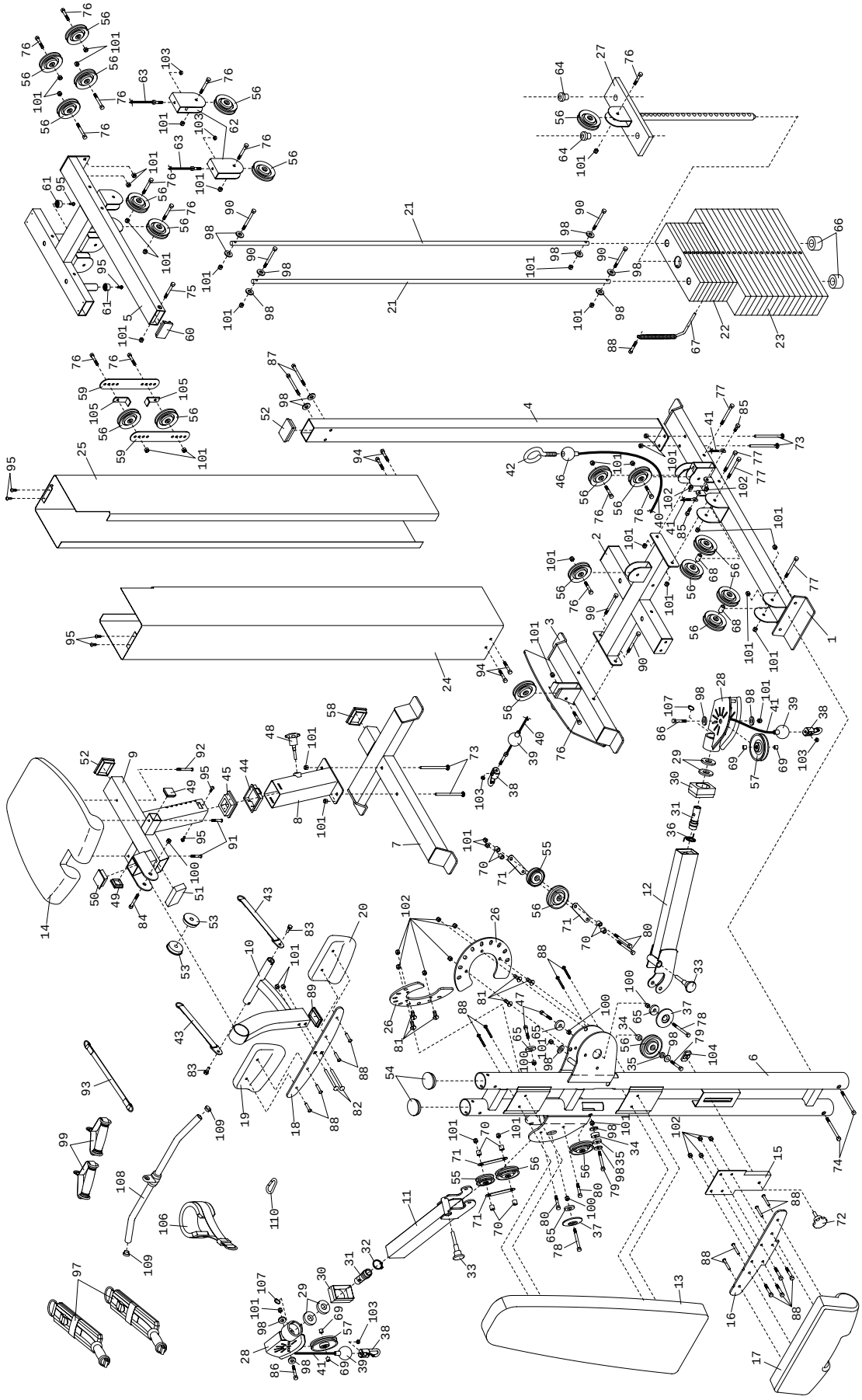
R1003A