EXPLODED DRAWING—Model No. FMSY99530

R0504A

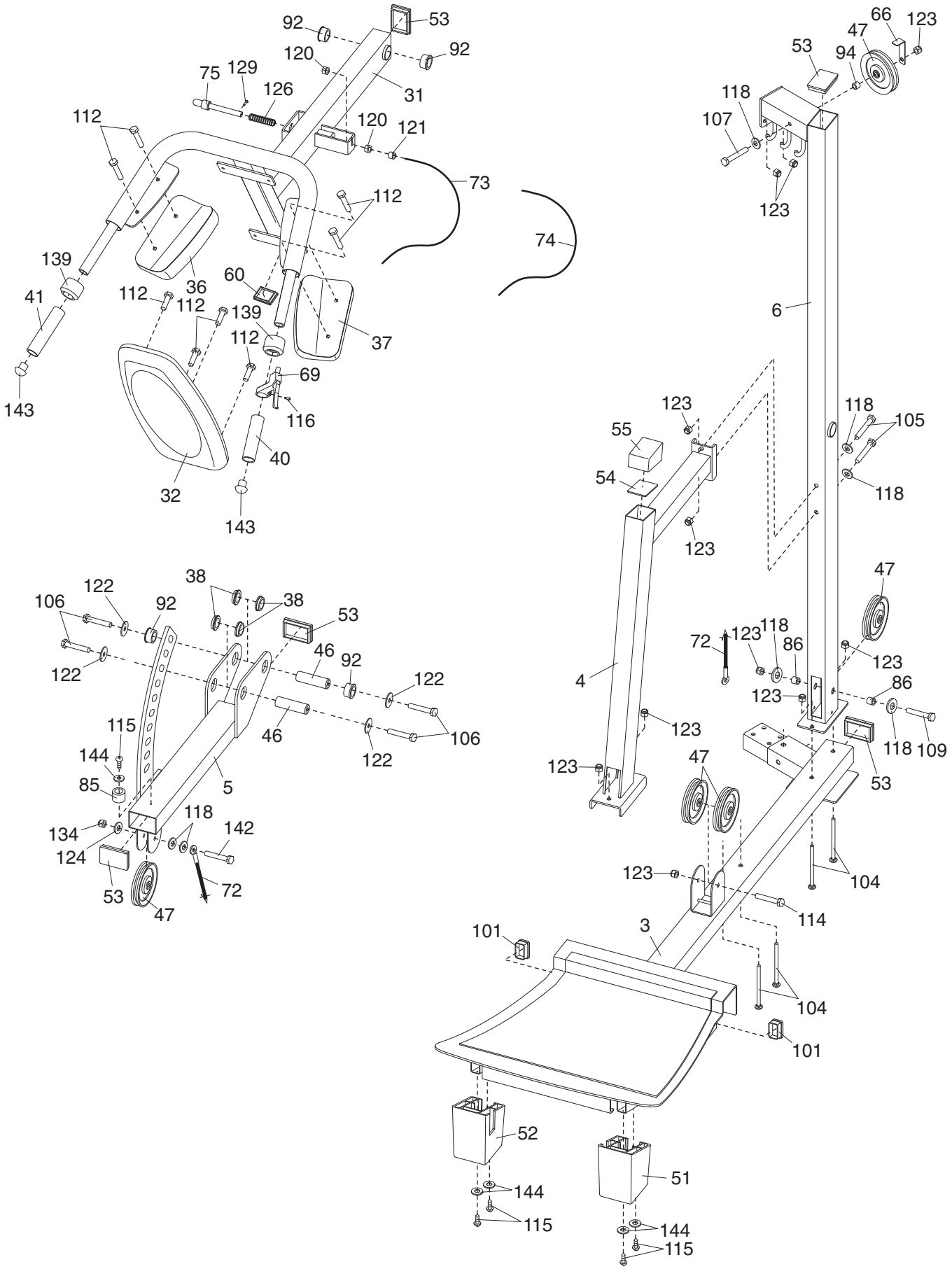

EXPLODED DRAWING—Model No. FMSY99530
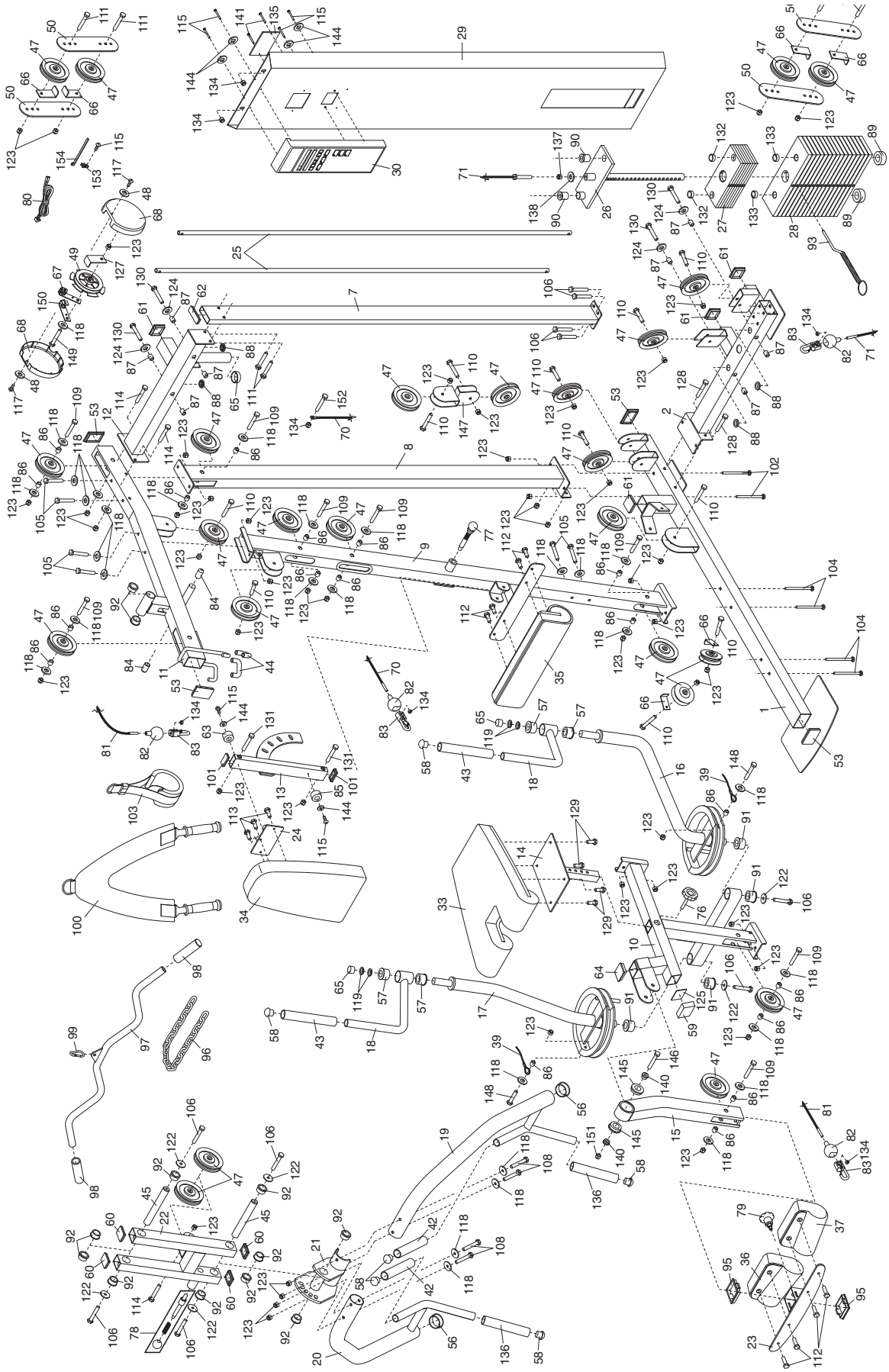
R0504A