EXPLODED DRAWING—Model No. GGEL62808.1
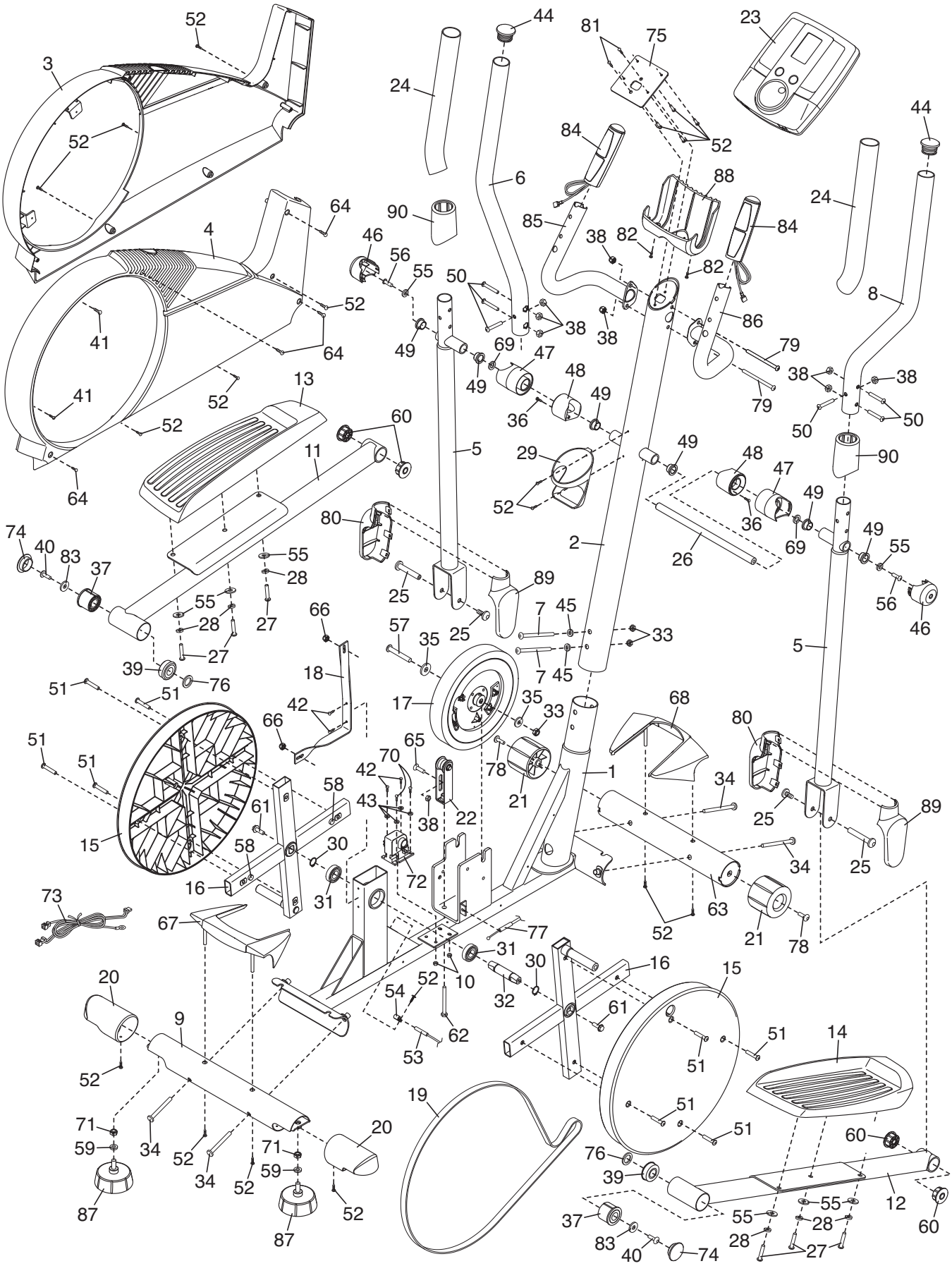
R1110A