EXPLODED DRAWING—Model No. GGEX02310.0
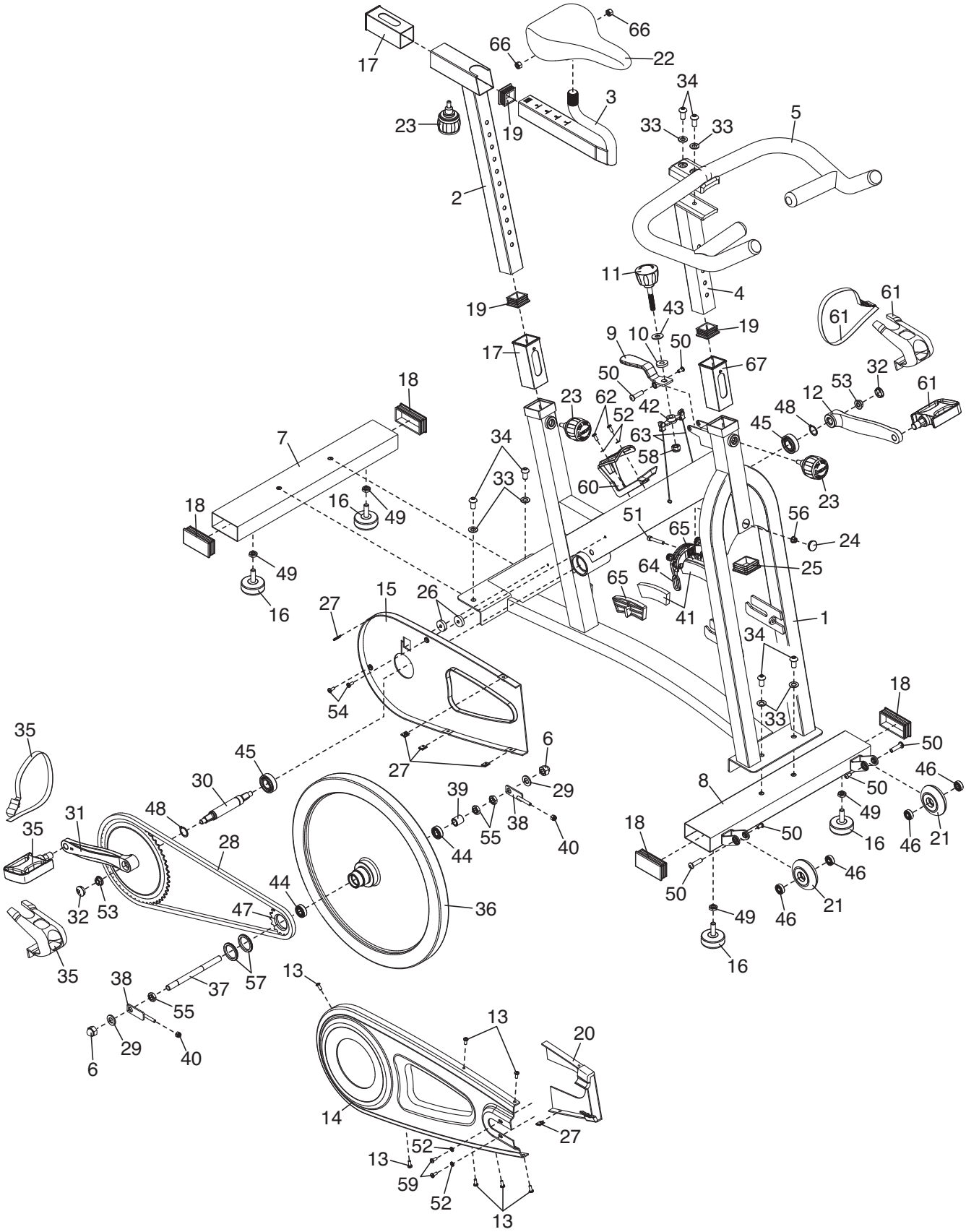
R0410A