EXPLODED DRAWING
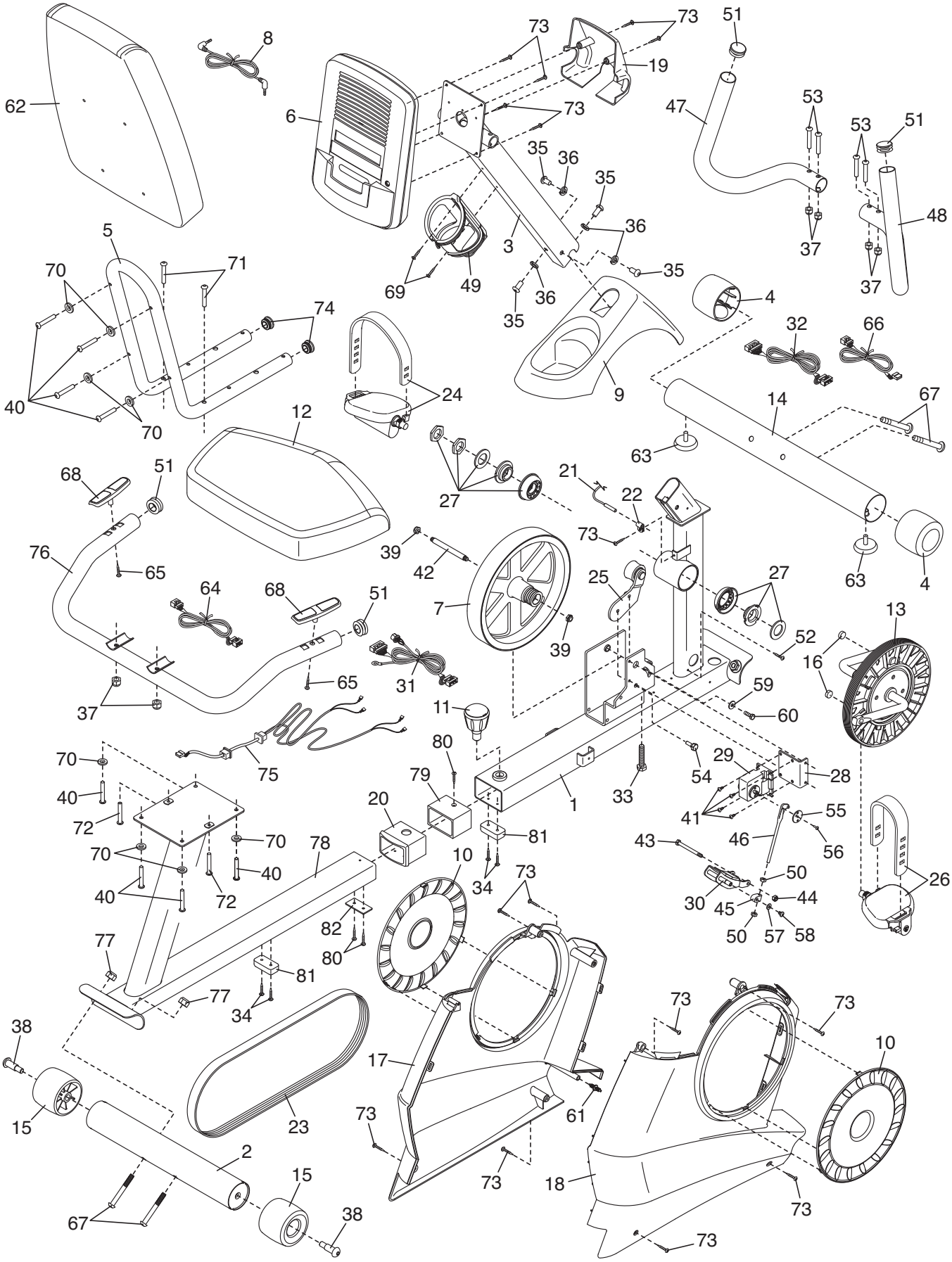
Model No. GGEX61709.1 R0212A