EXPLODED DRAWING
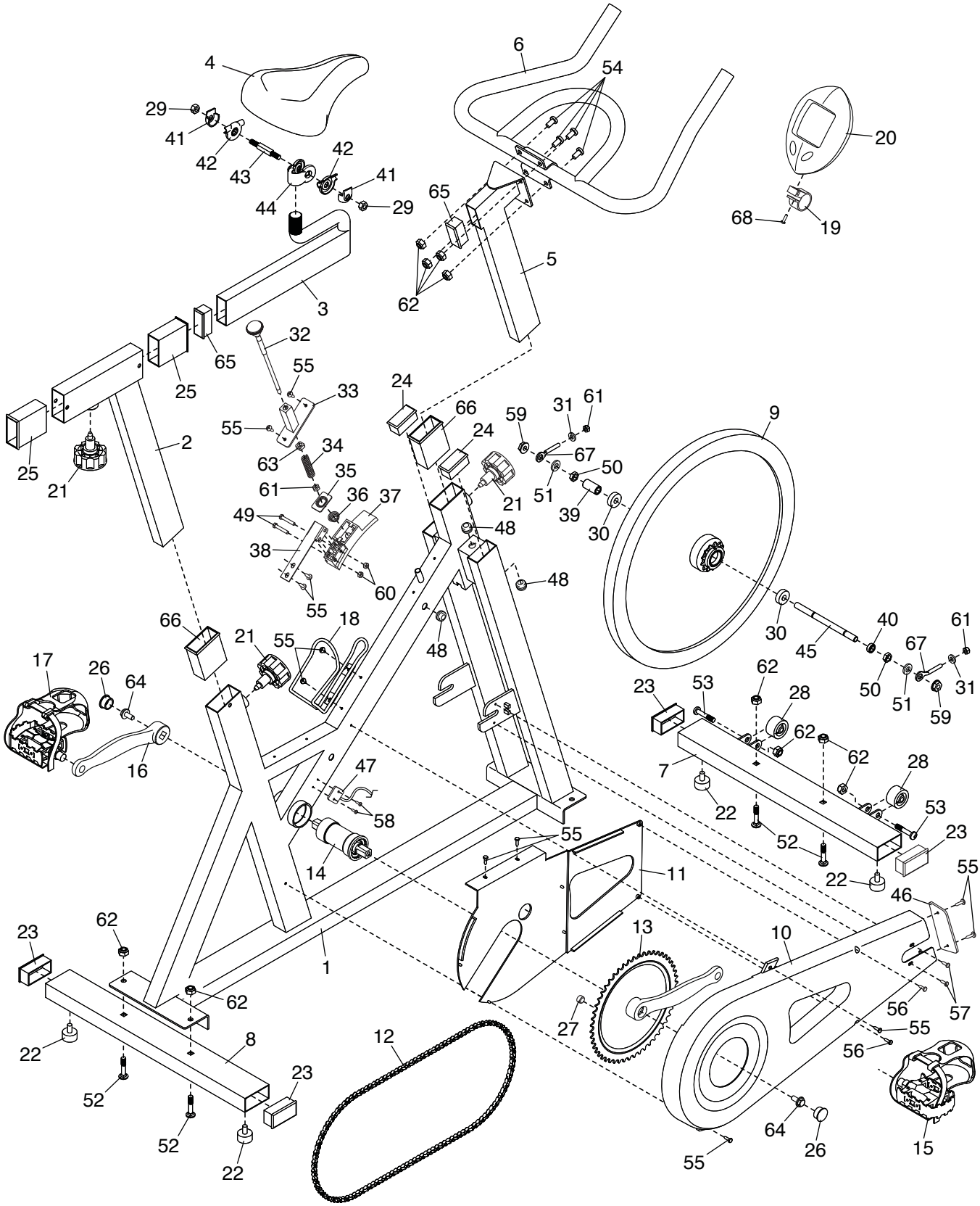
Model No. GGEX62410.2 R1111A