EXPLODED DRAWING—Model No. GZFM6020.0

R0305A

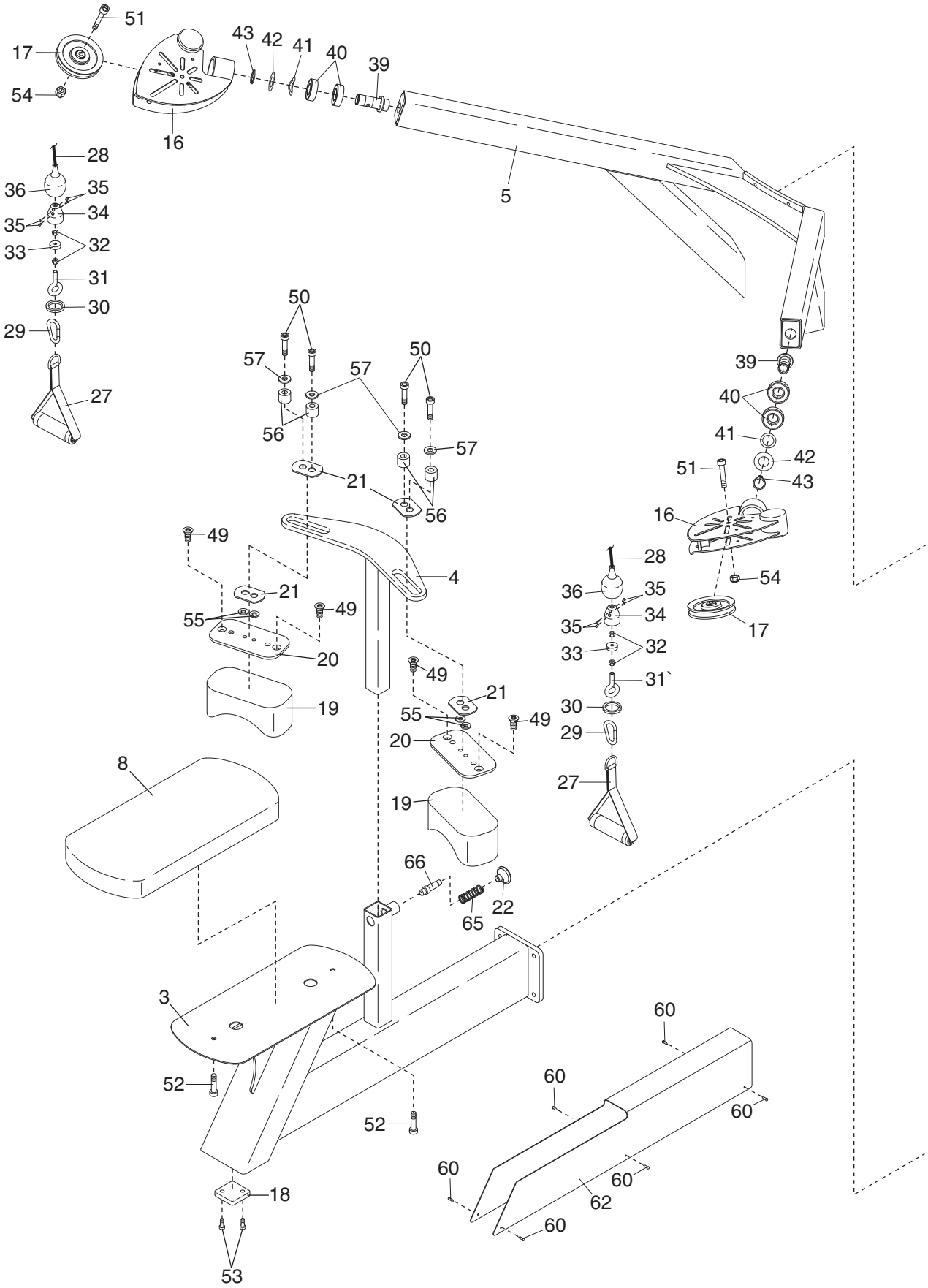

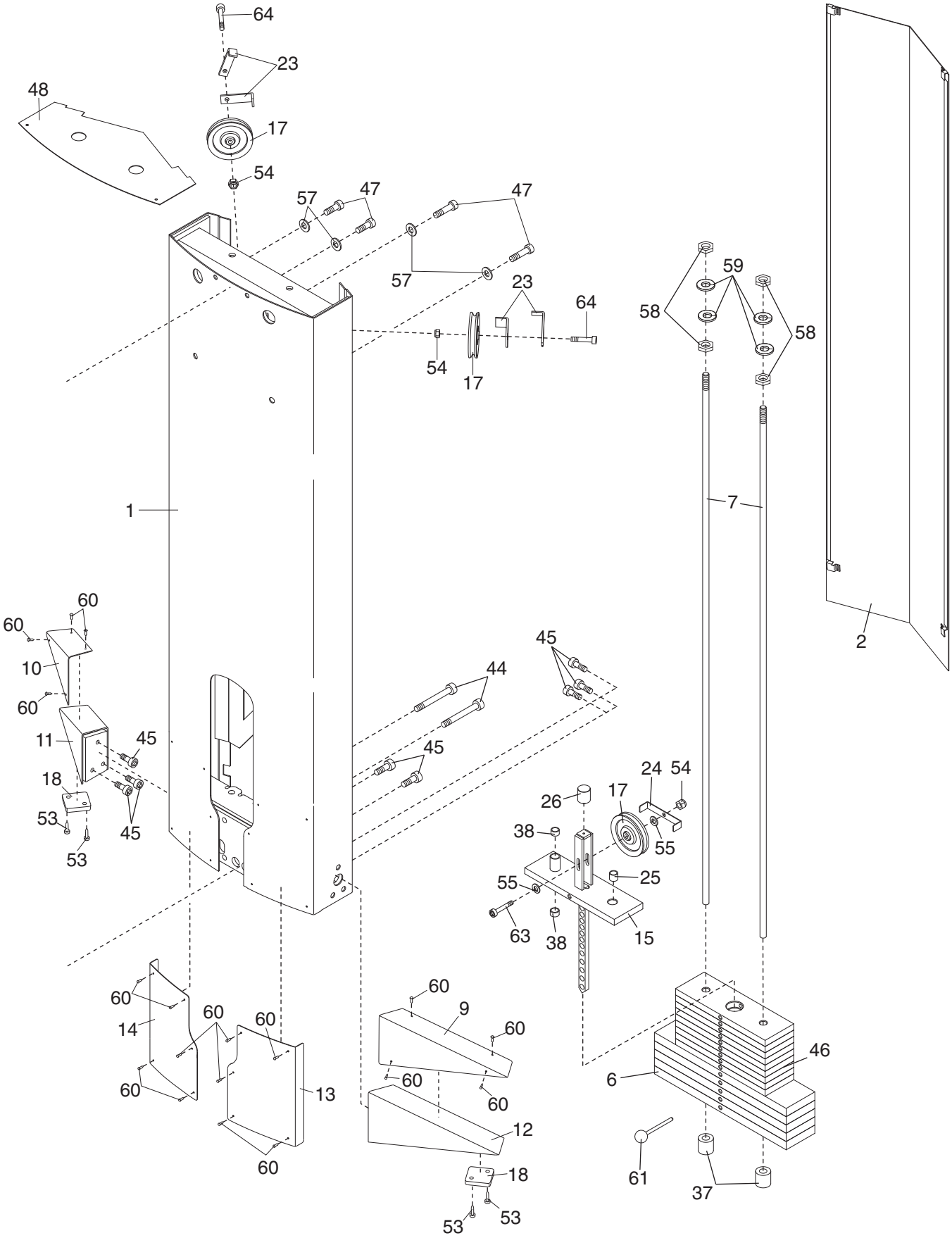
64
23
48
17
54
57
47
47
57
23
64
54
17
59
58
58
1
7
2
60
60
10
60
45
44
11
45
45
18
24
54
26
17
53
45
38
55
53
55
25
63
38
15
60
60
9
60
14
60
60
46
60
6
13
60
60
12
61
18
37
53
53