EXPLODED DRAWING—Model No. HF-TR9750.0

R0409A

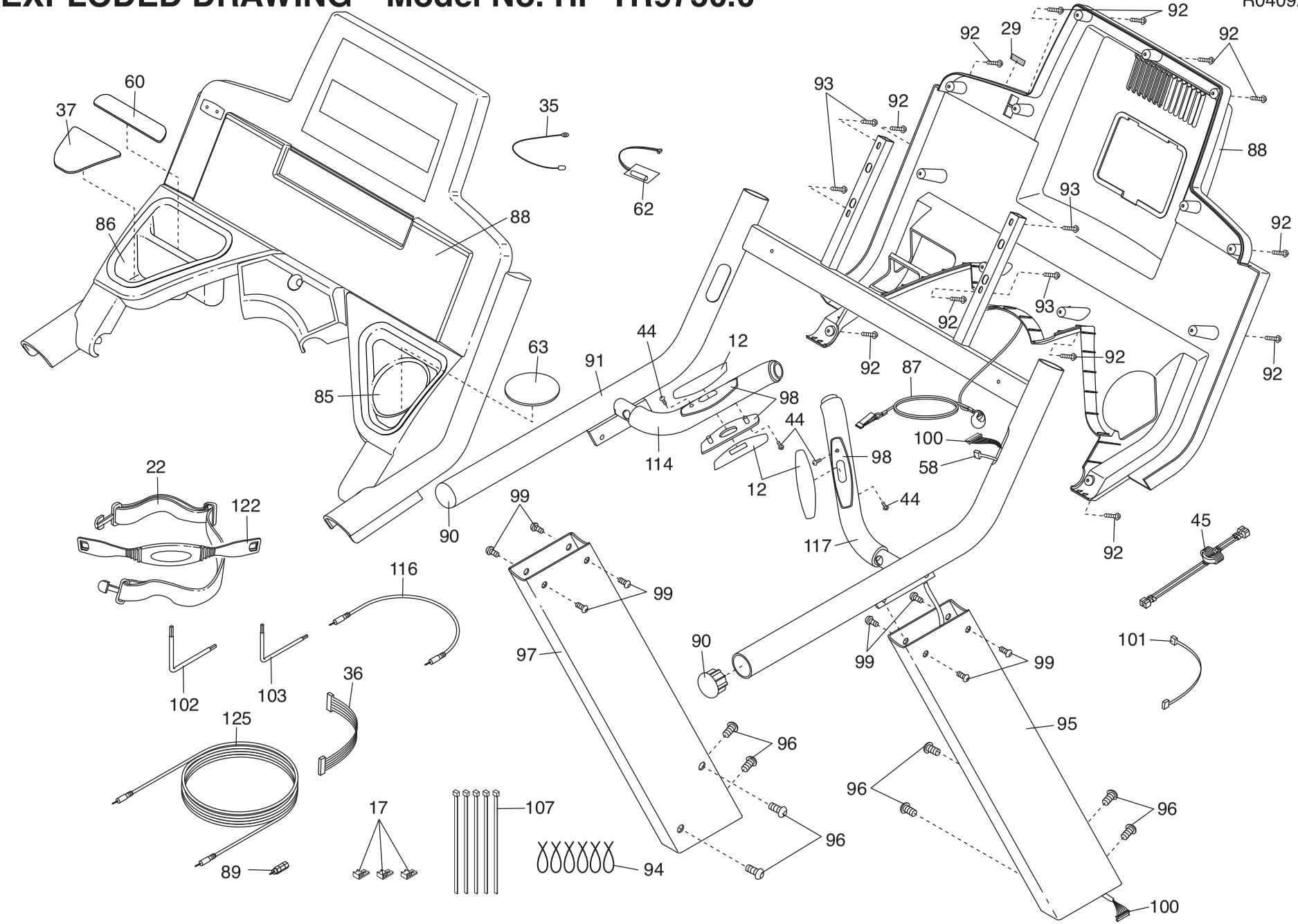
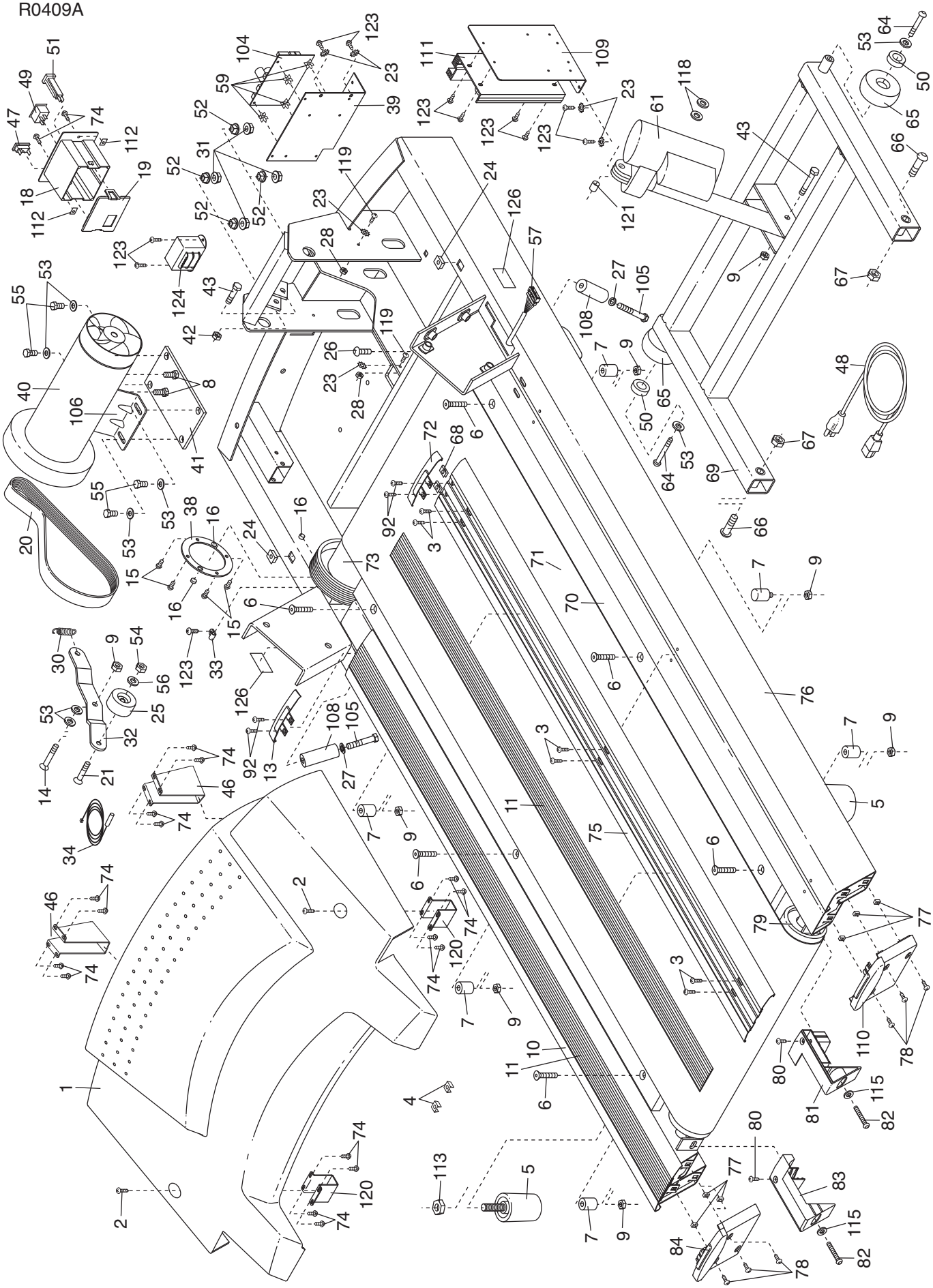
R0409A