Exploded Drawing Model No. HNSC0790
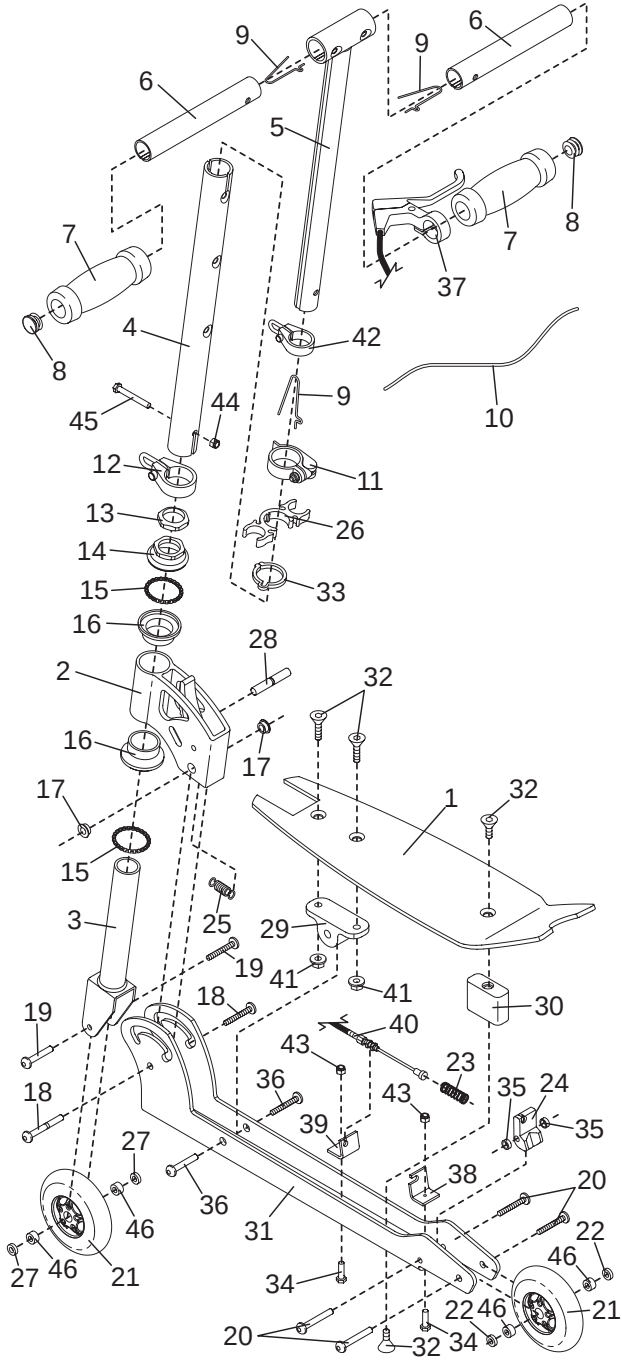
R0101A