EXPLODED DRAWING—Model No. HREVEL36040
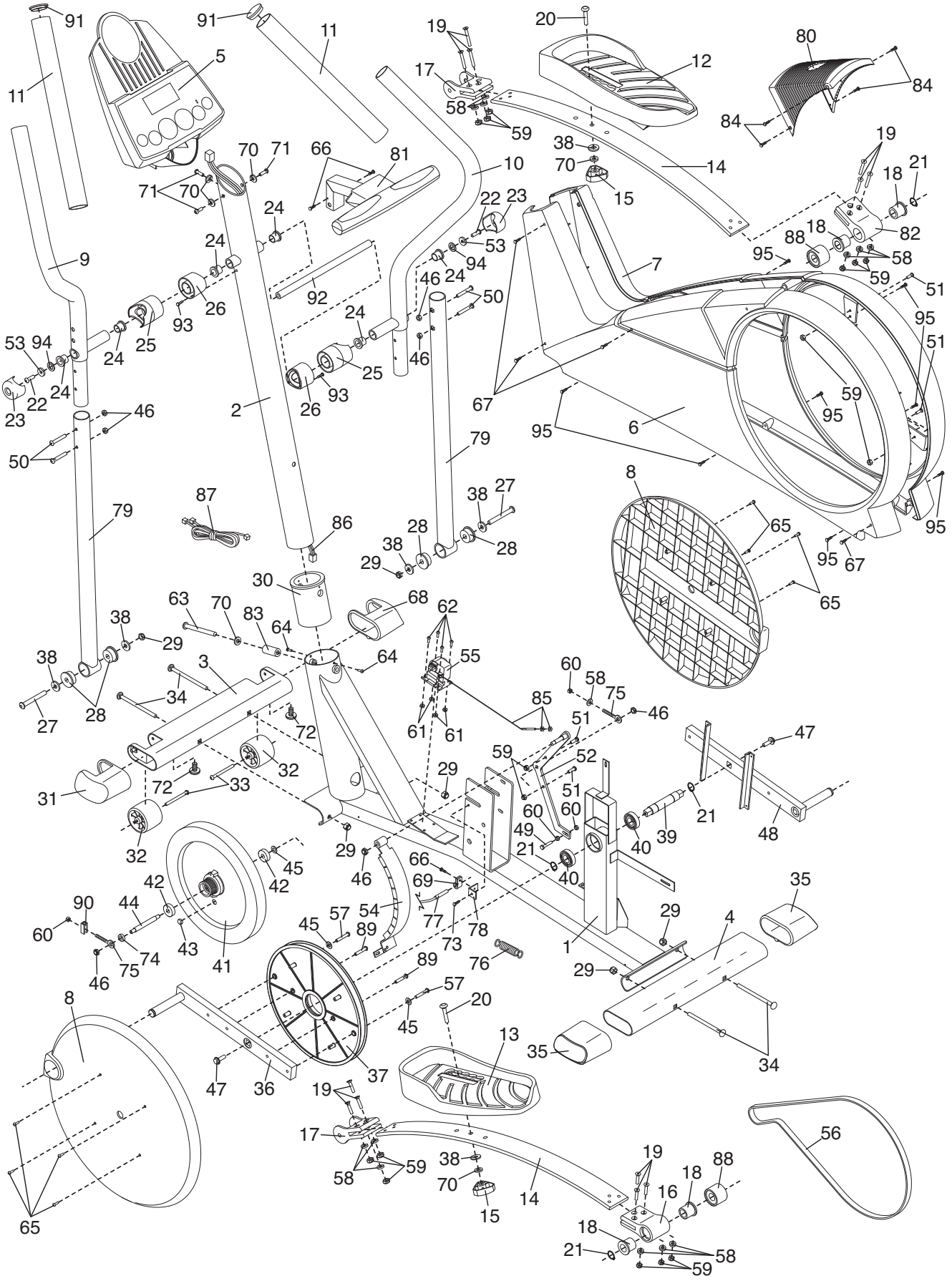
R0804A