EXPLODED DRAWING—Model No. HREVEX24030
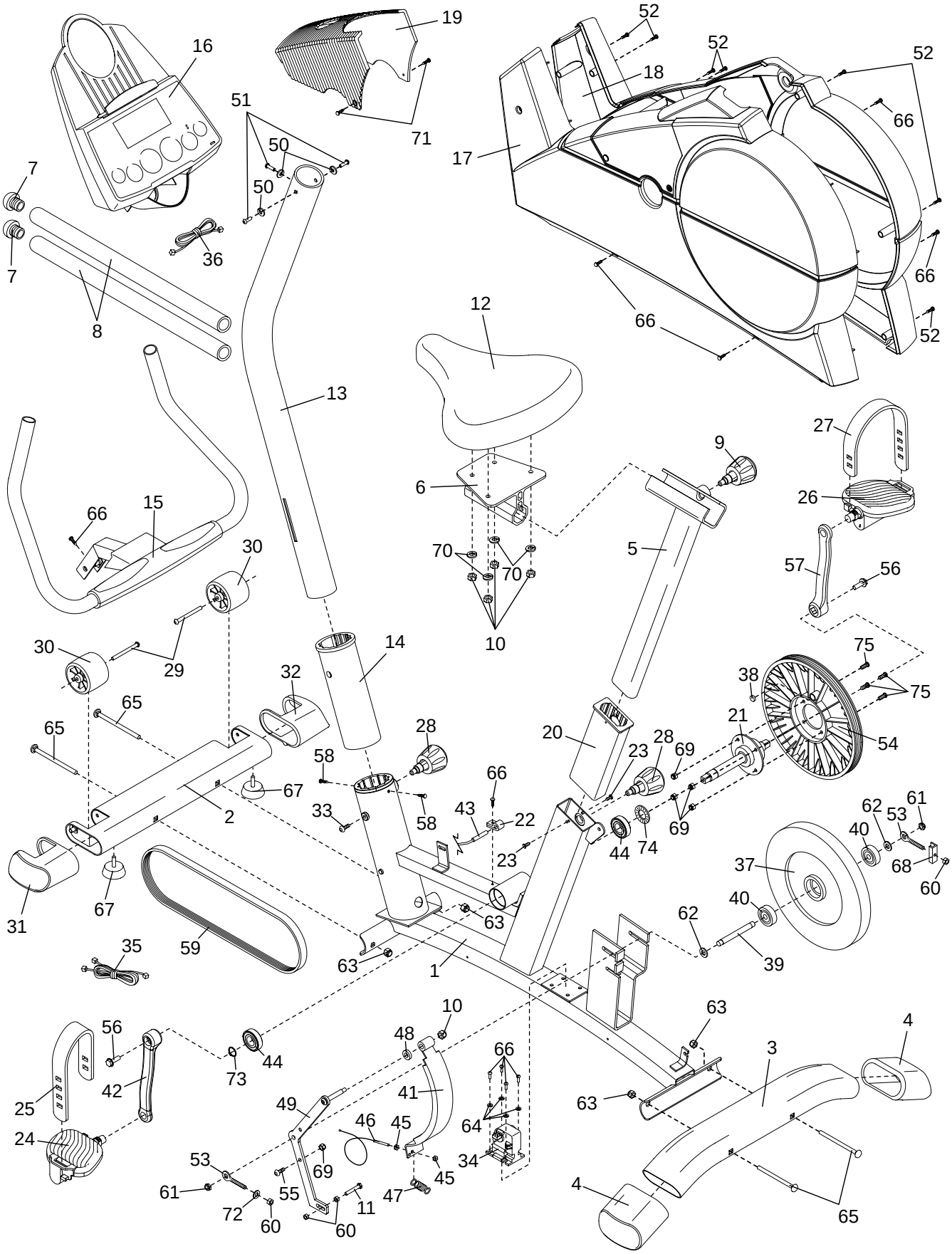
R0903A