EXPLODED DRAWING
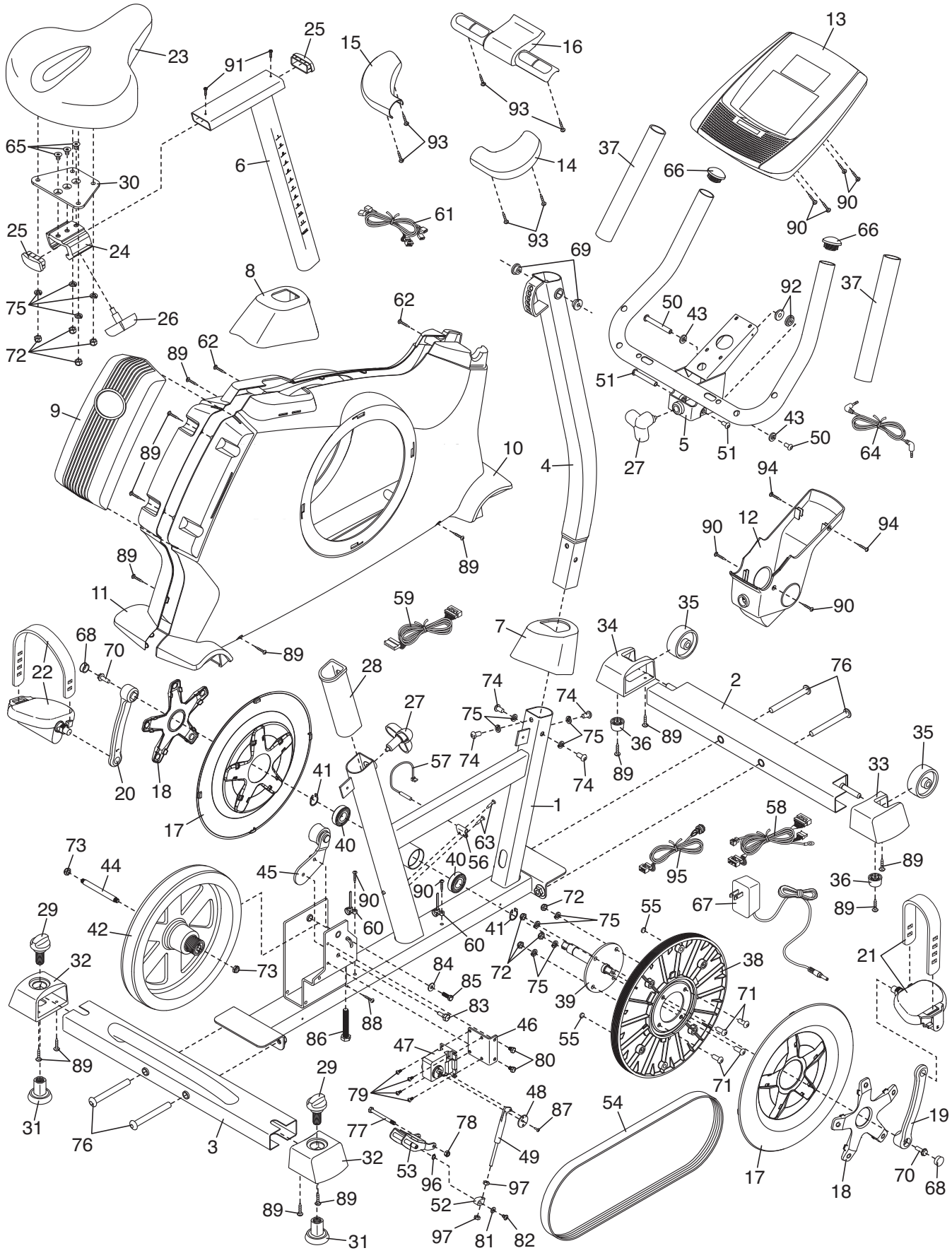
Model No. HREX53009.1 R1110A