EXPLODED DRAWING—Model No. HRT99020
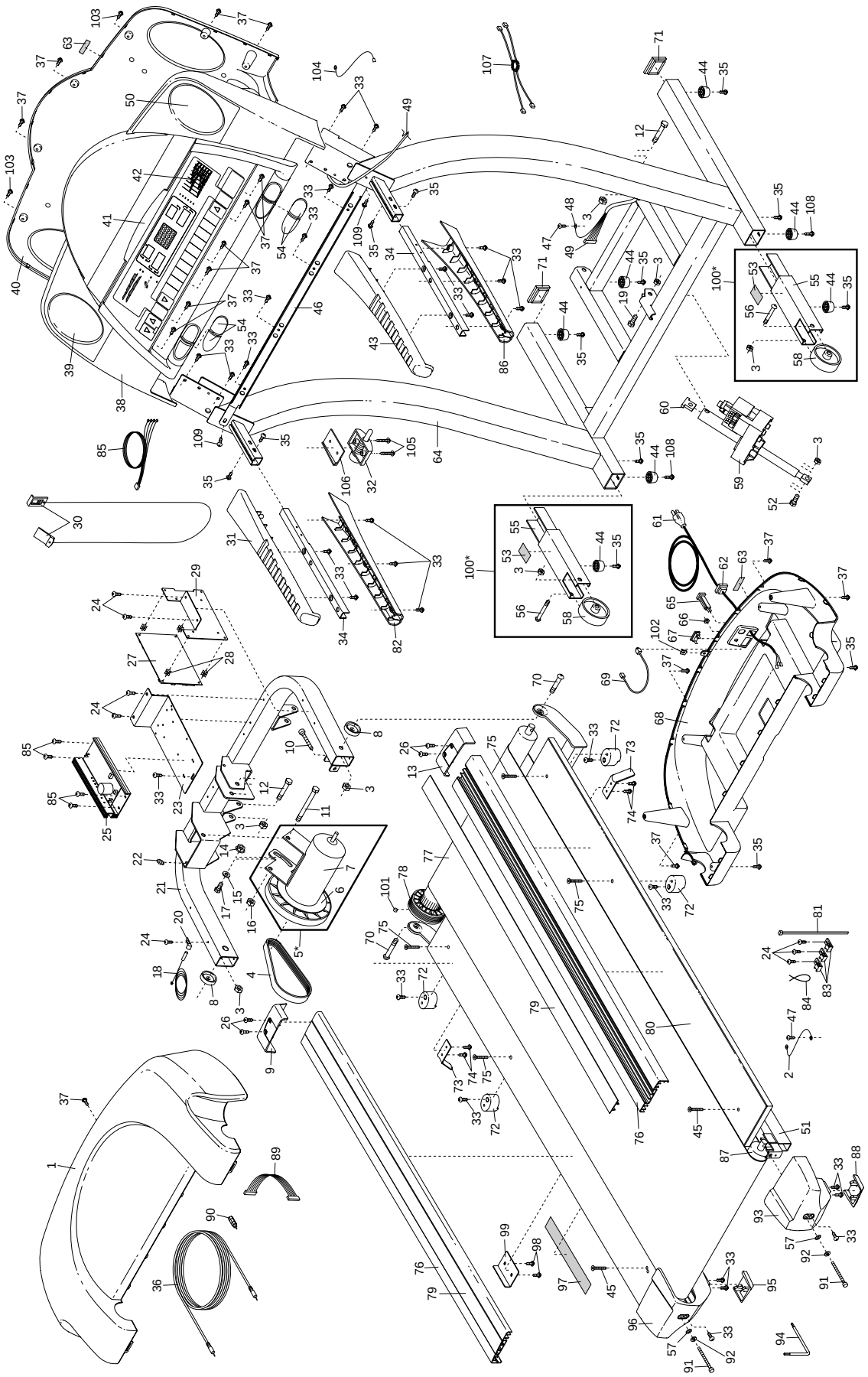
R1102A