EXPLODED DRAWING—Model No. HRTL10980
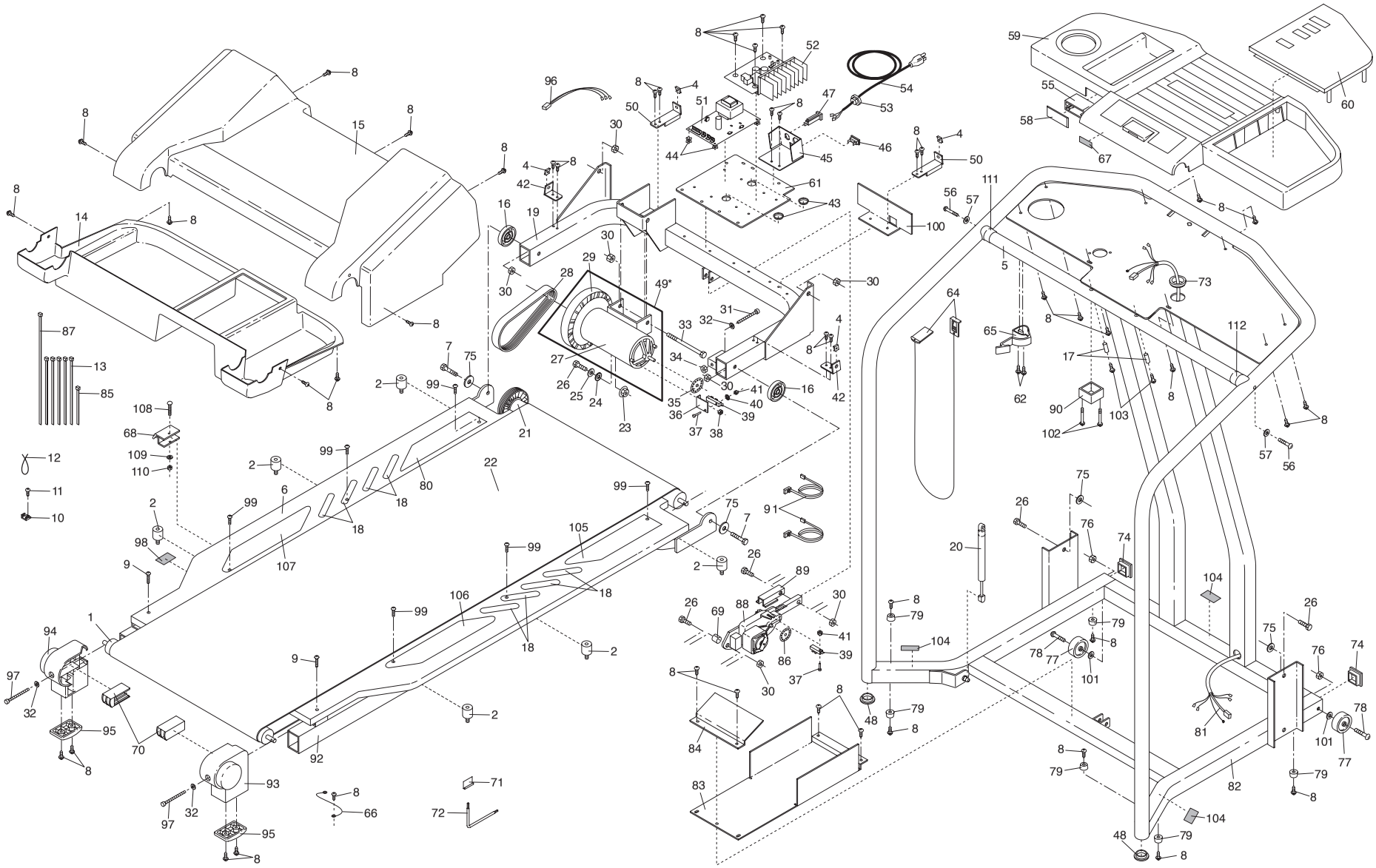
R1098A