EXPLODED DRAWING—Model No. HRTL11940

R1103A

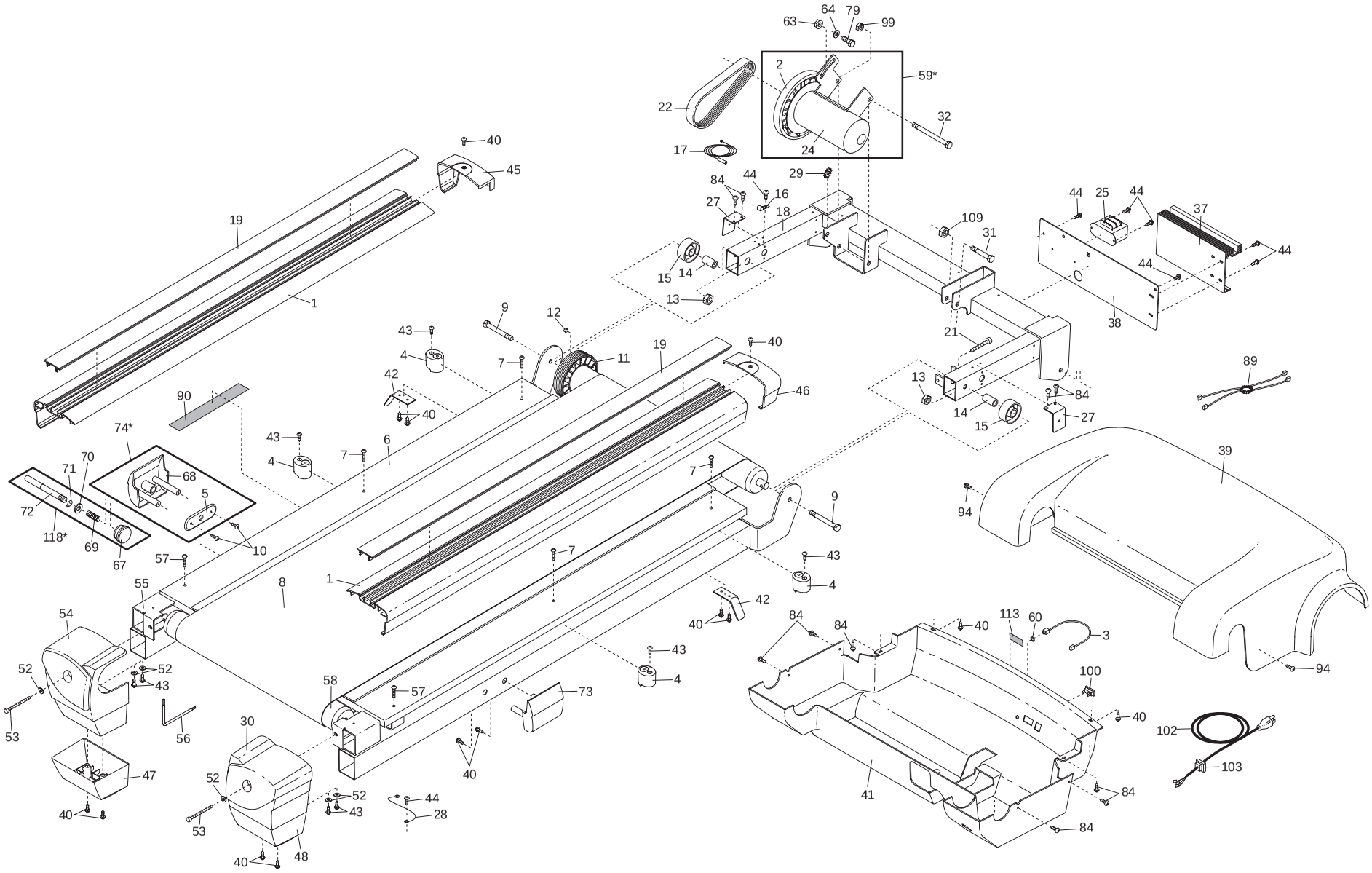

EXPLODED DRAWING—Model No. HRTL11940
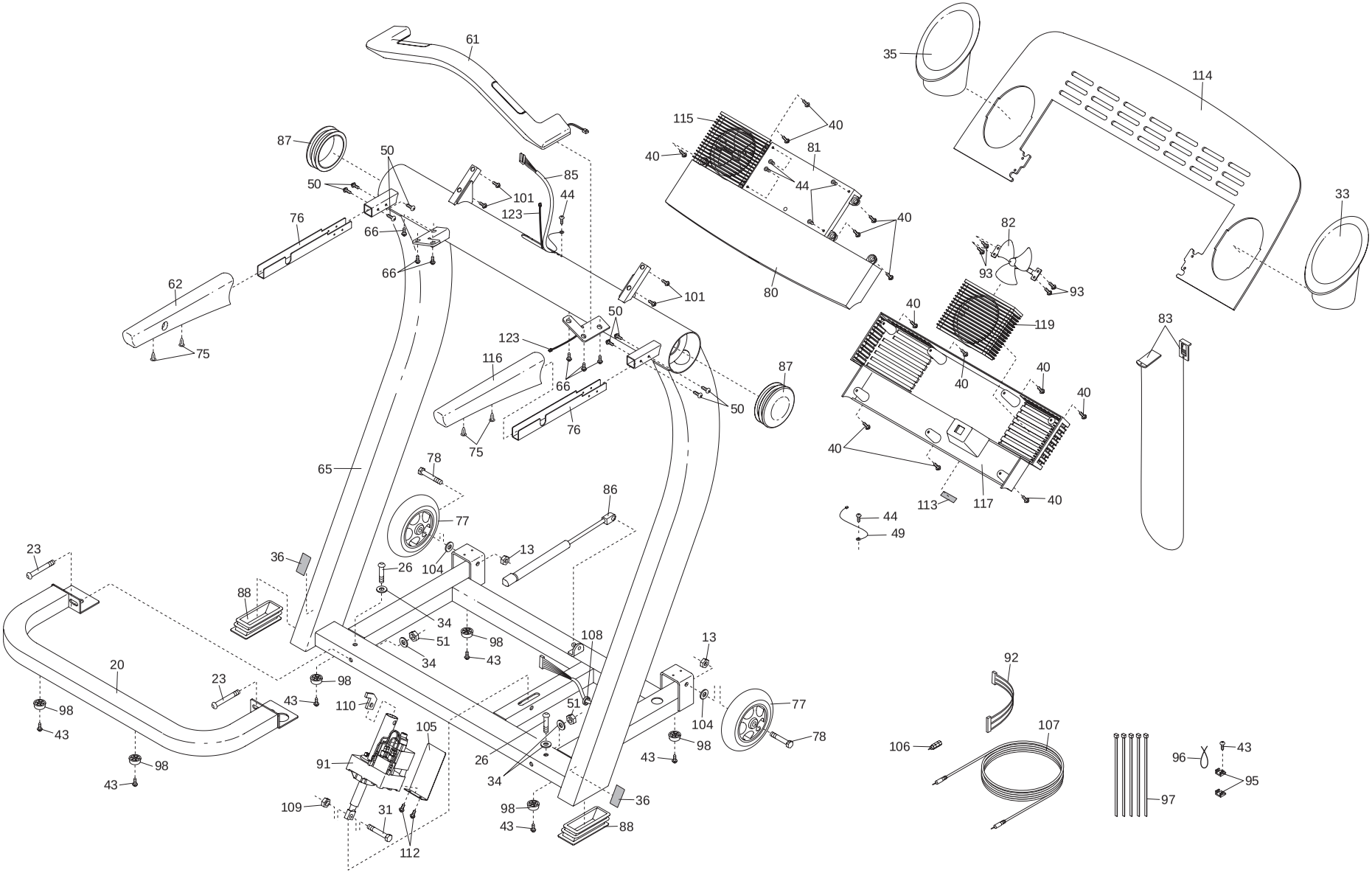
R1103A