EXPLODED DRAWING—Model No. HRTL19990

R1299A

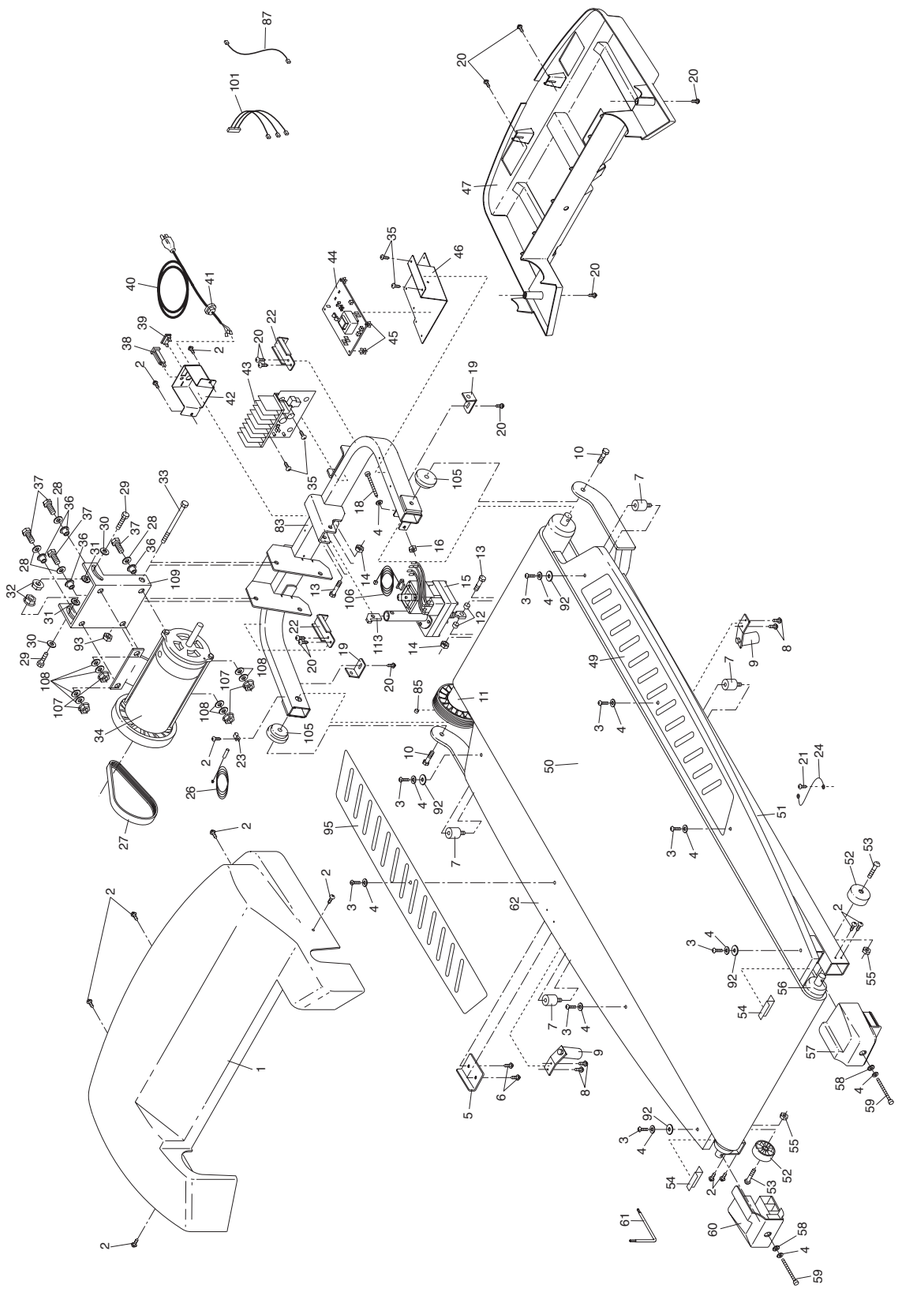

EXPLODED DRAWING—Model No. HRTL19990
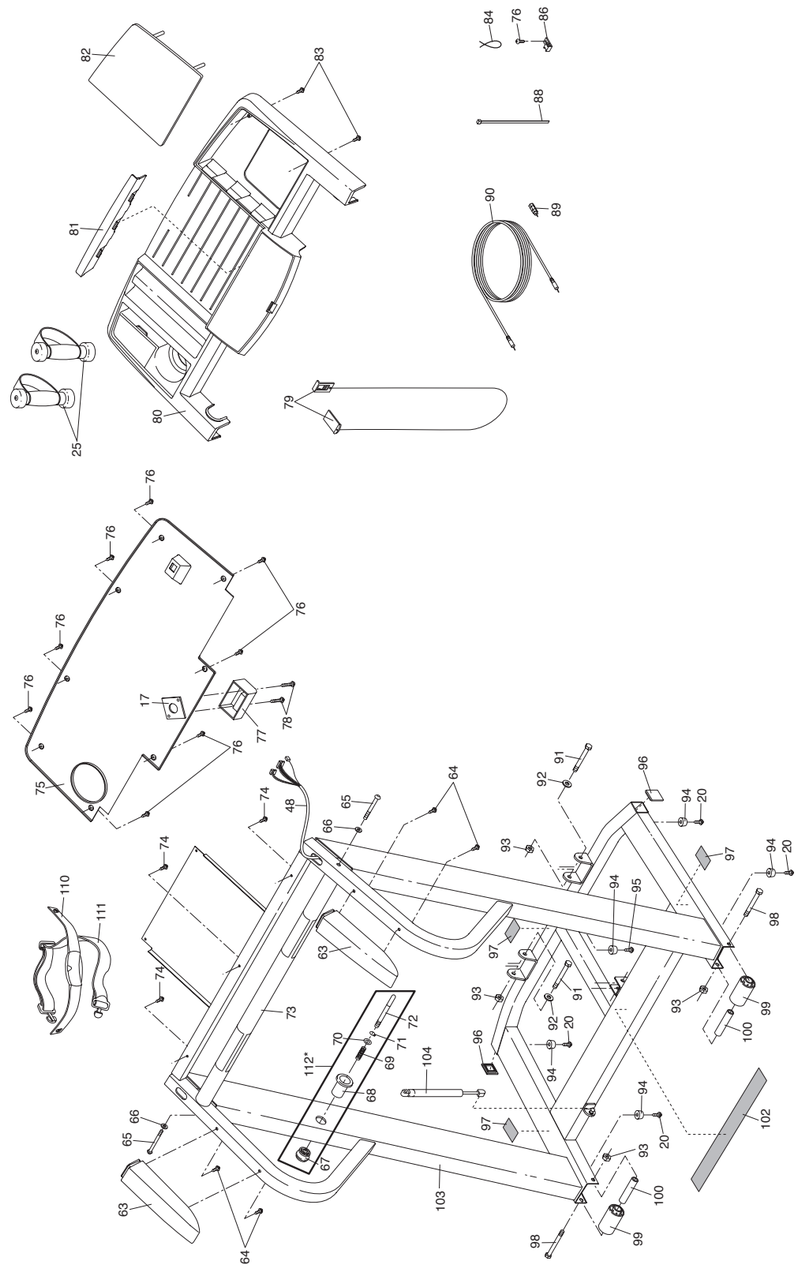
R1299A