EXPLODED DRAWING—Model No. HRTL2000
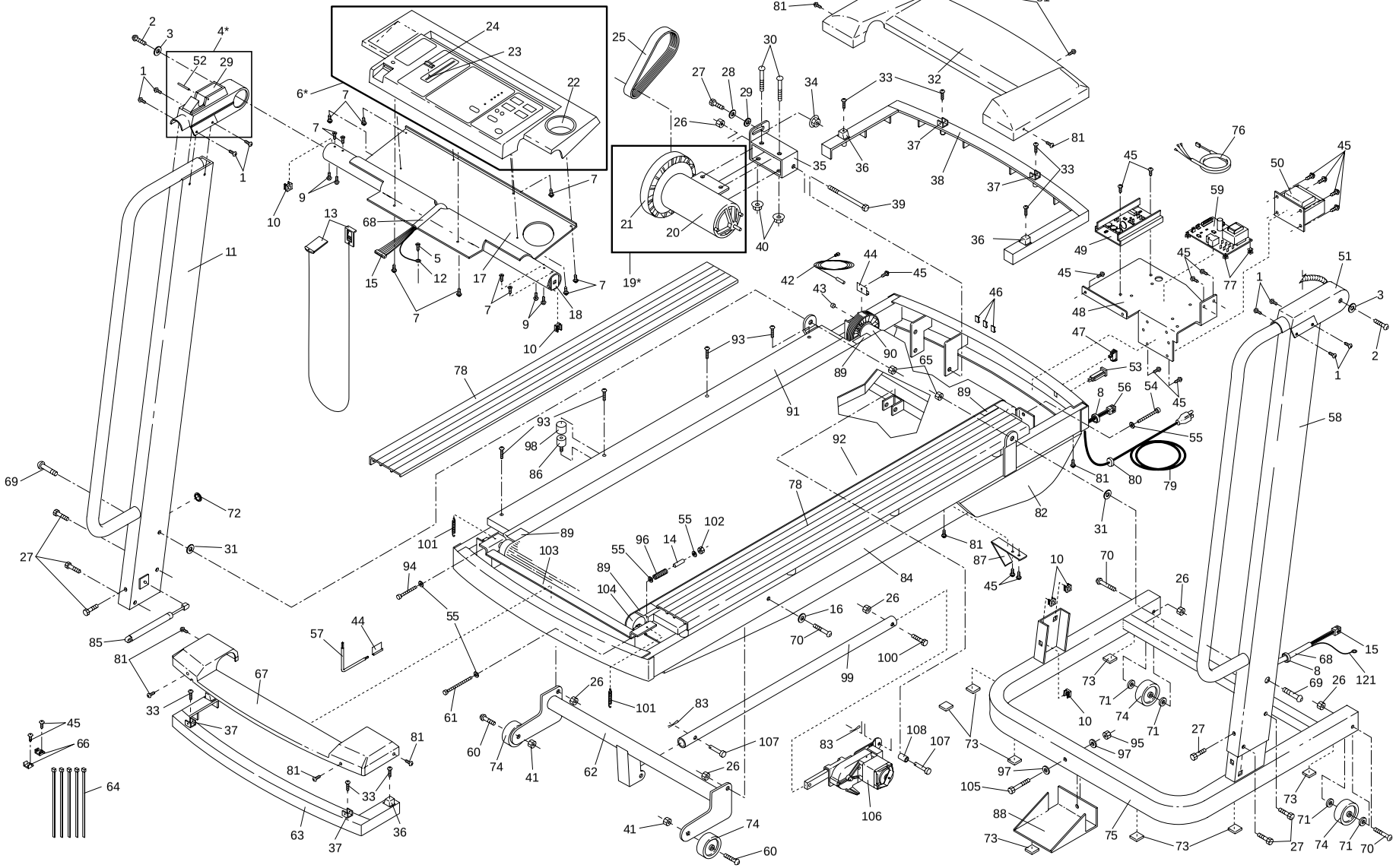
R0496A