EXPLODED DRAWING—Model No. HTL13940

R0104A

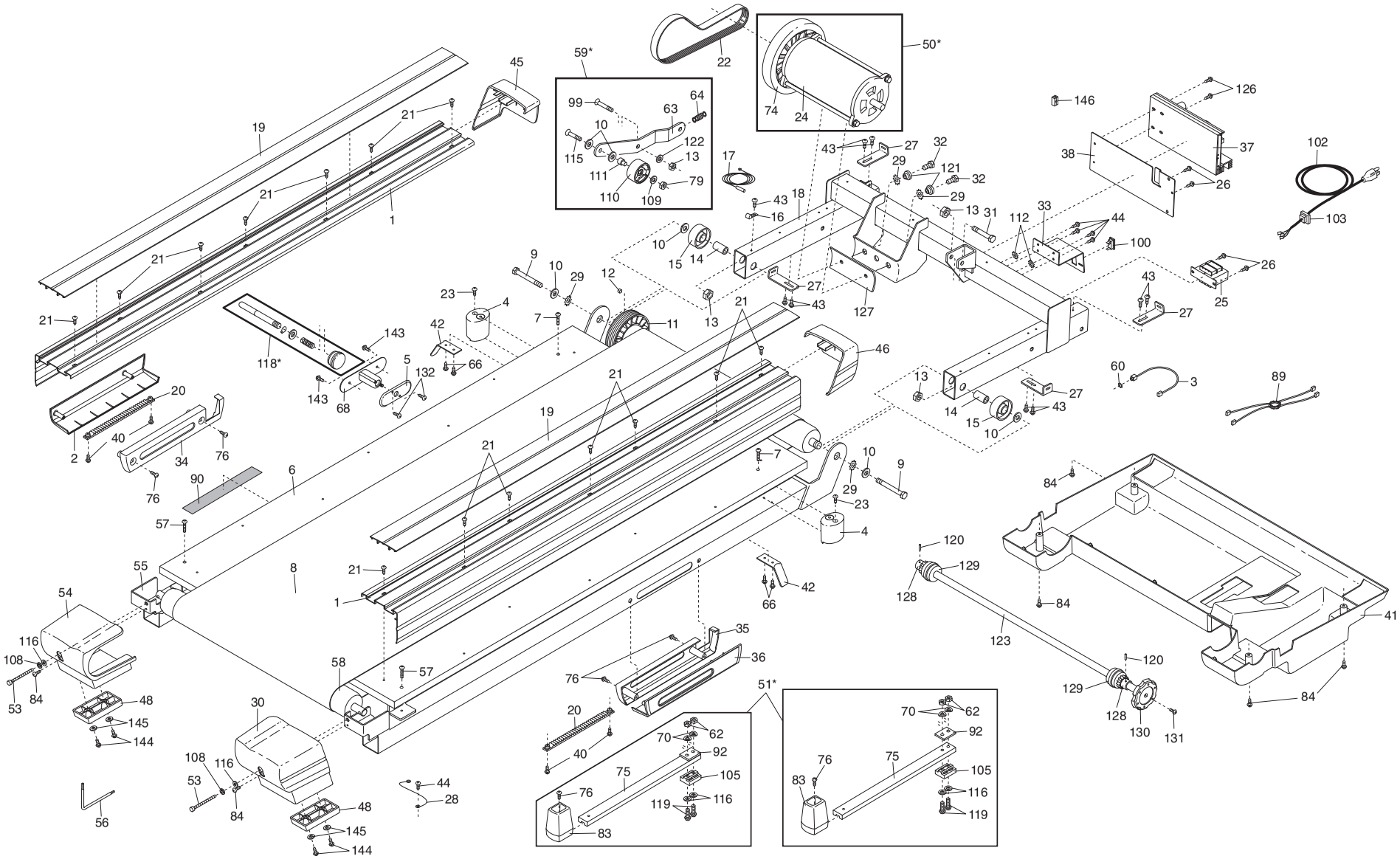

EXPLODED DRAWING—Model No. HTL13940
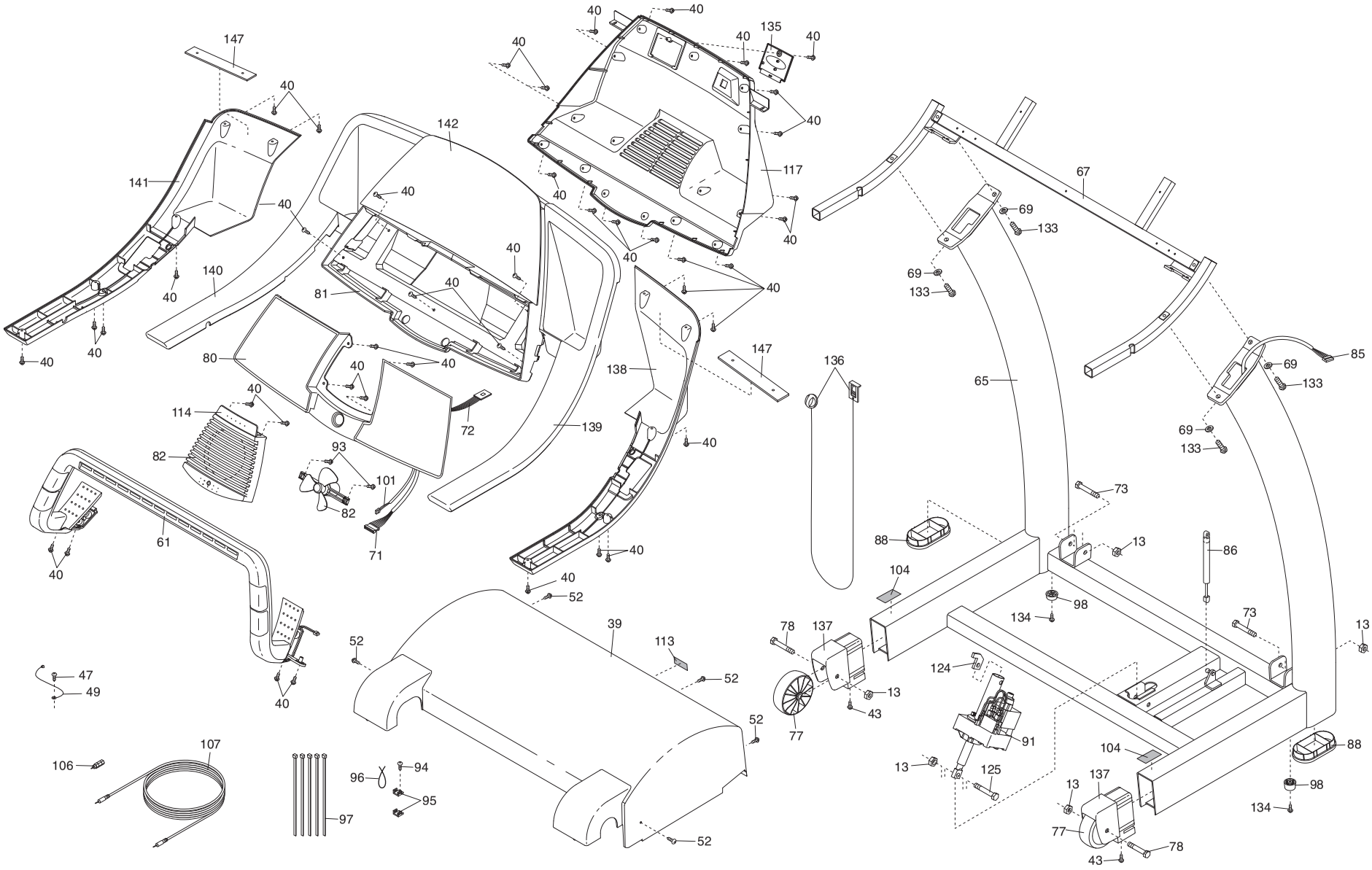
R0104A