Exploded Drawing—Model No. IMHS40090
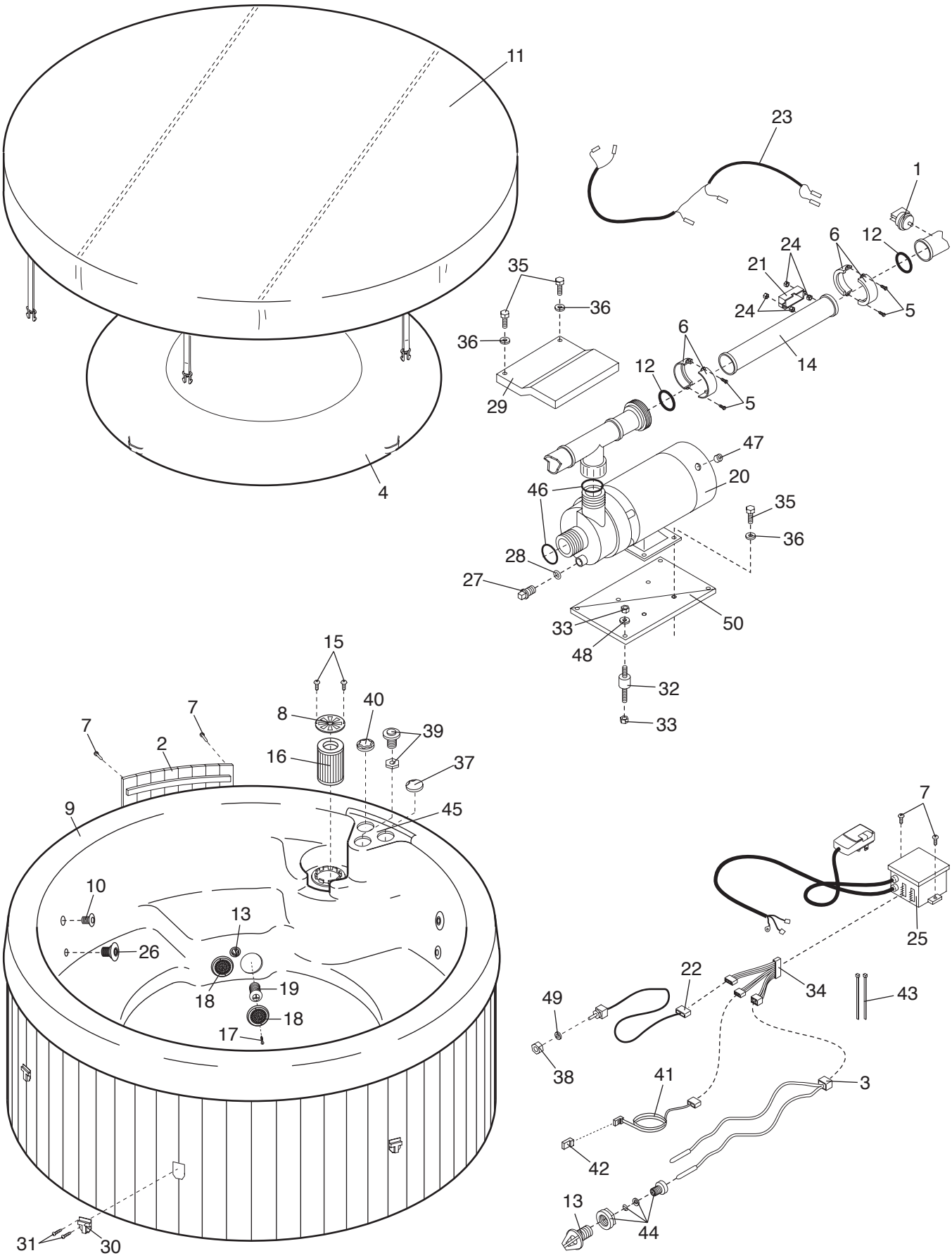
R0299A