Exploded Drawing—Model No. IMHS40091
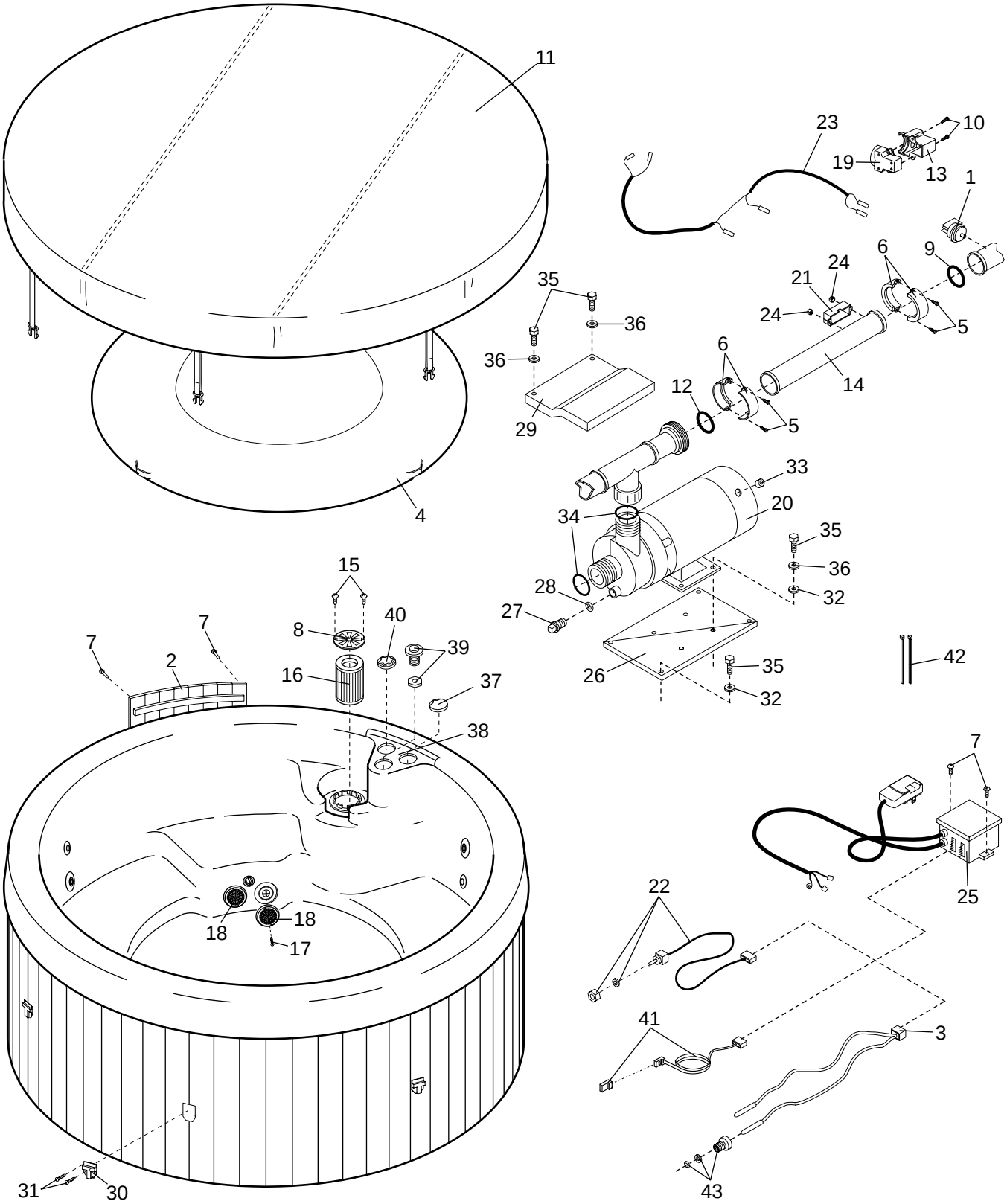
R1000A