Exploded Drawing—Model No. IMHS61000
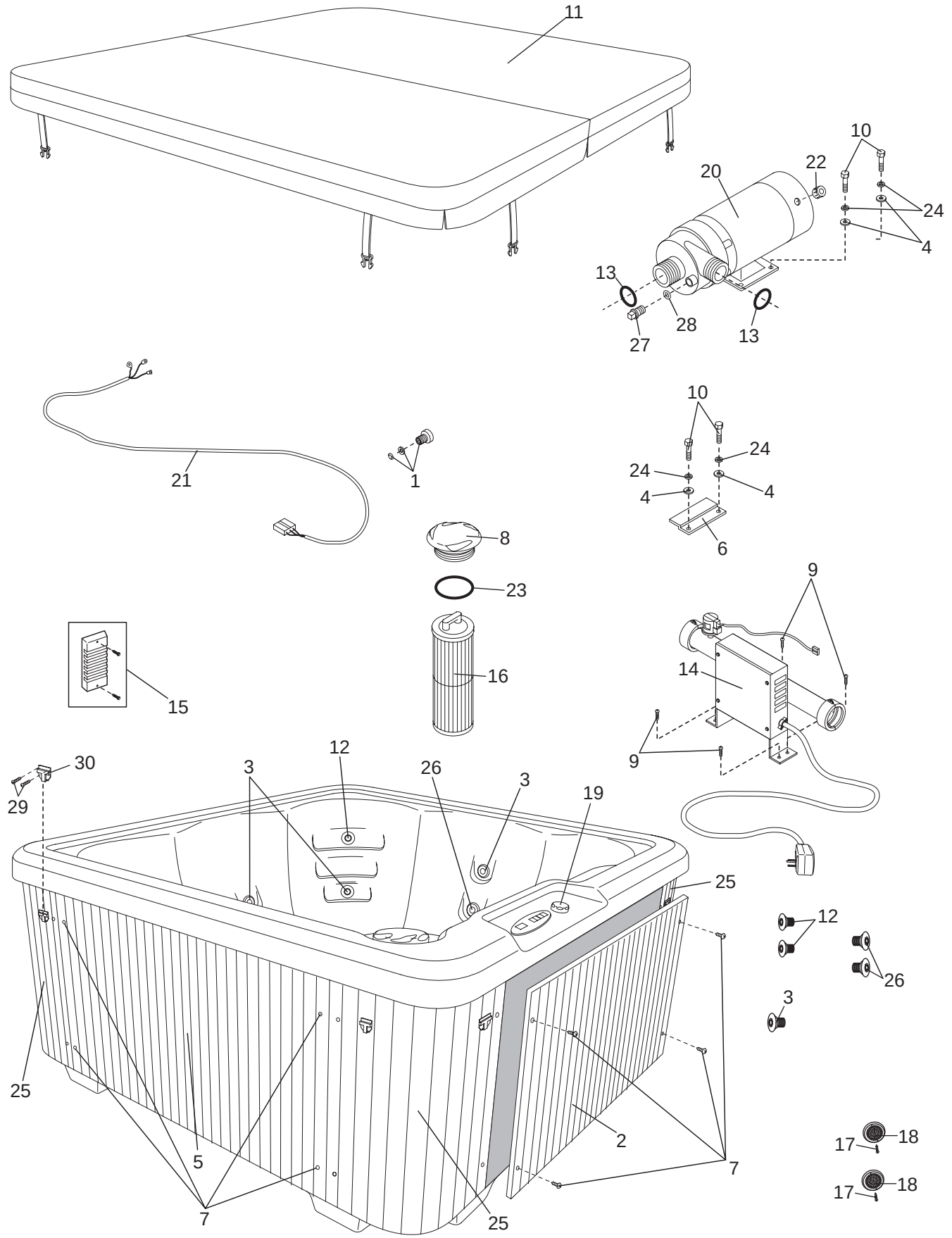
R0600A