Exploded Drawing—Model No. IMHS61500
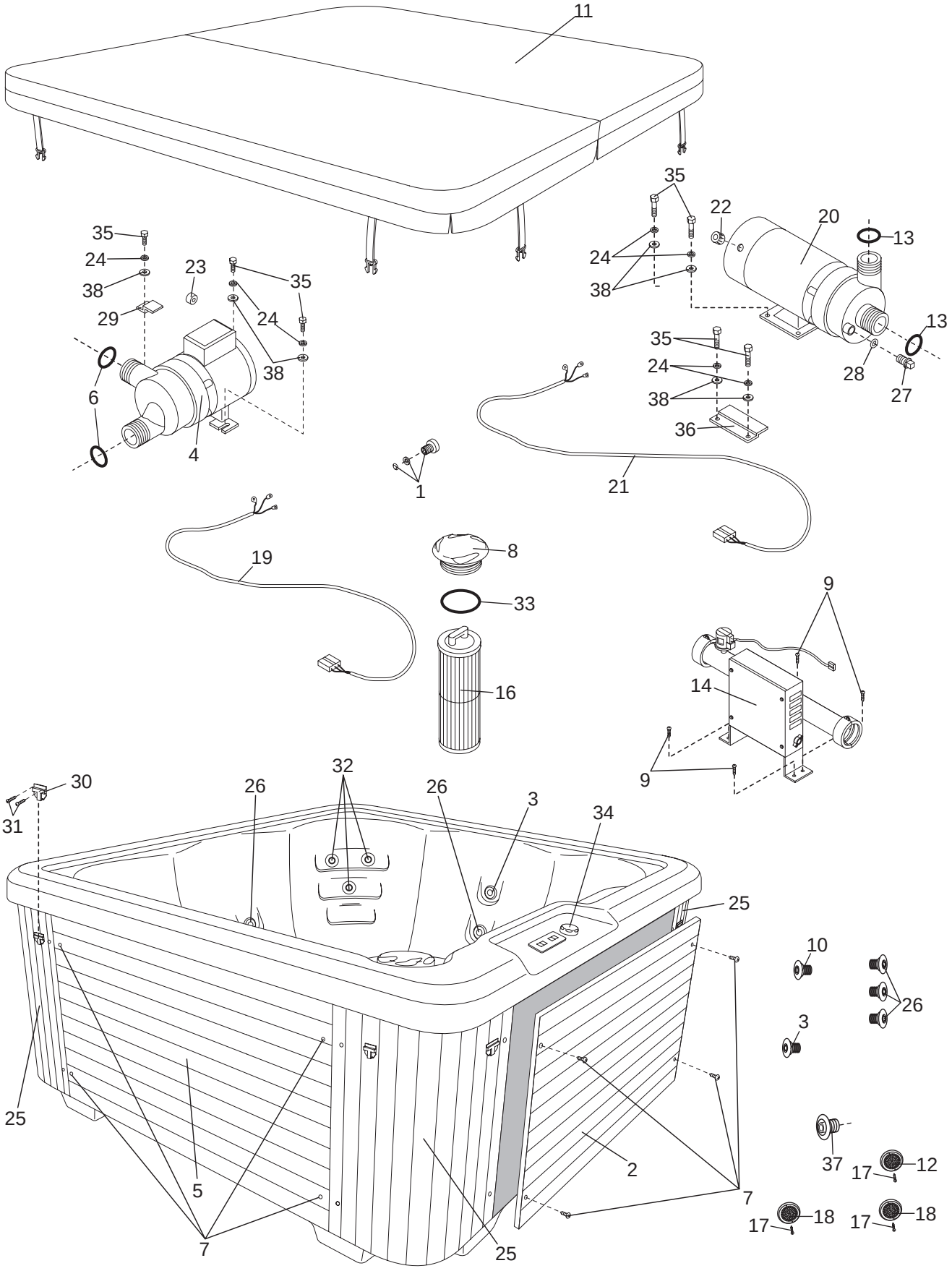
R0600A