Exploded Drawing—Model No. IMHS63100
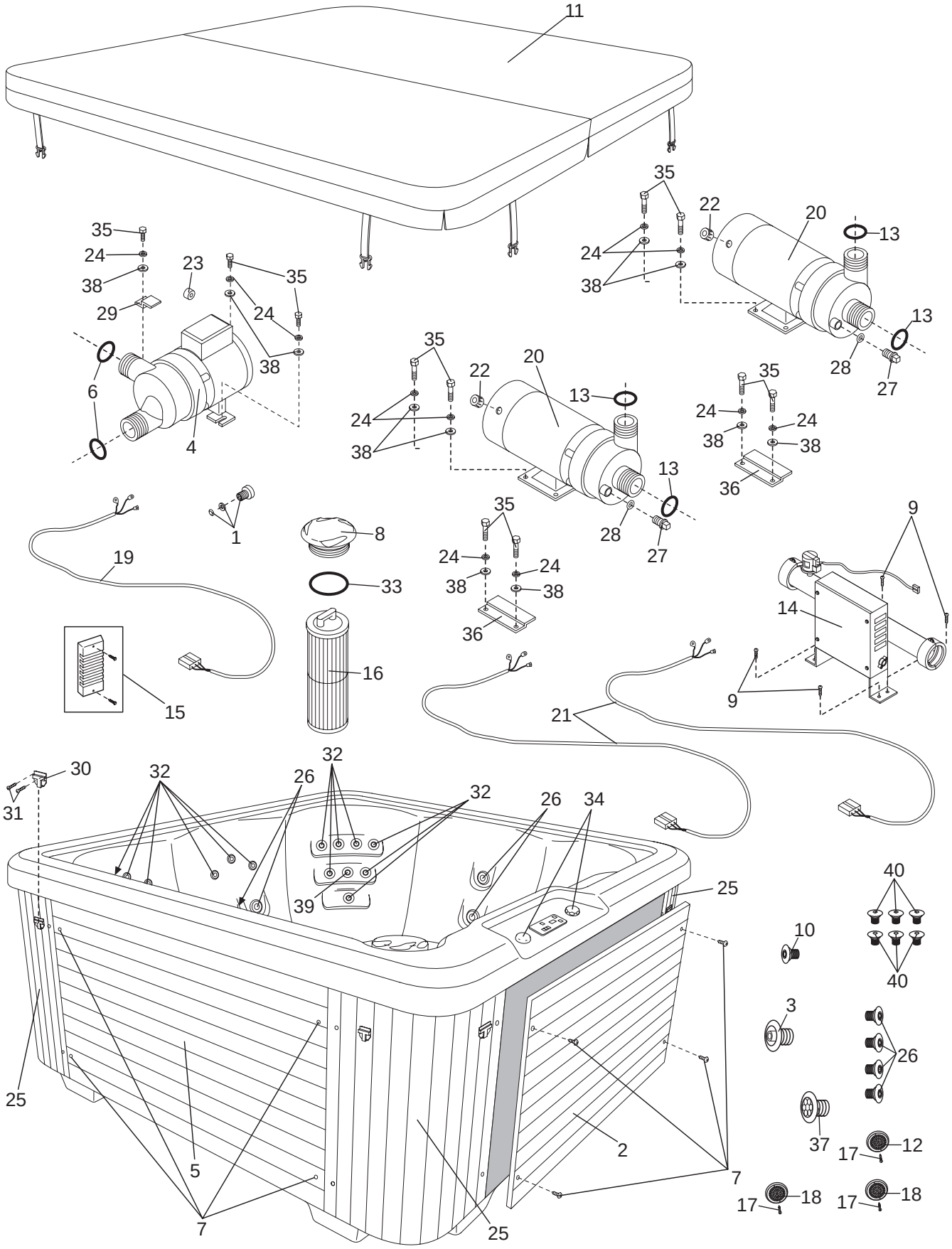
R0700A