EXPLODED DRAWING—Model No. IMTL07800
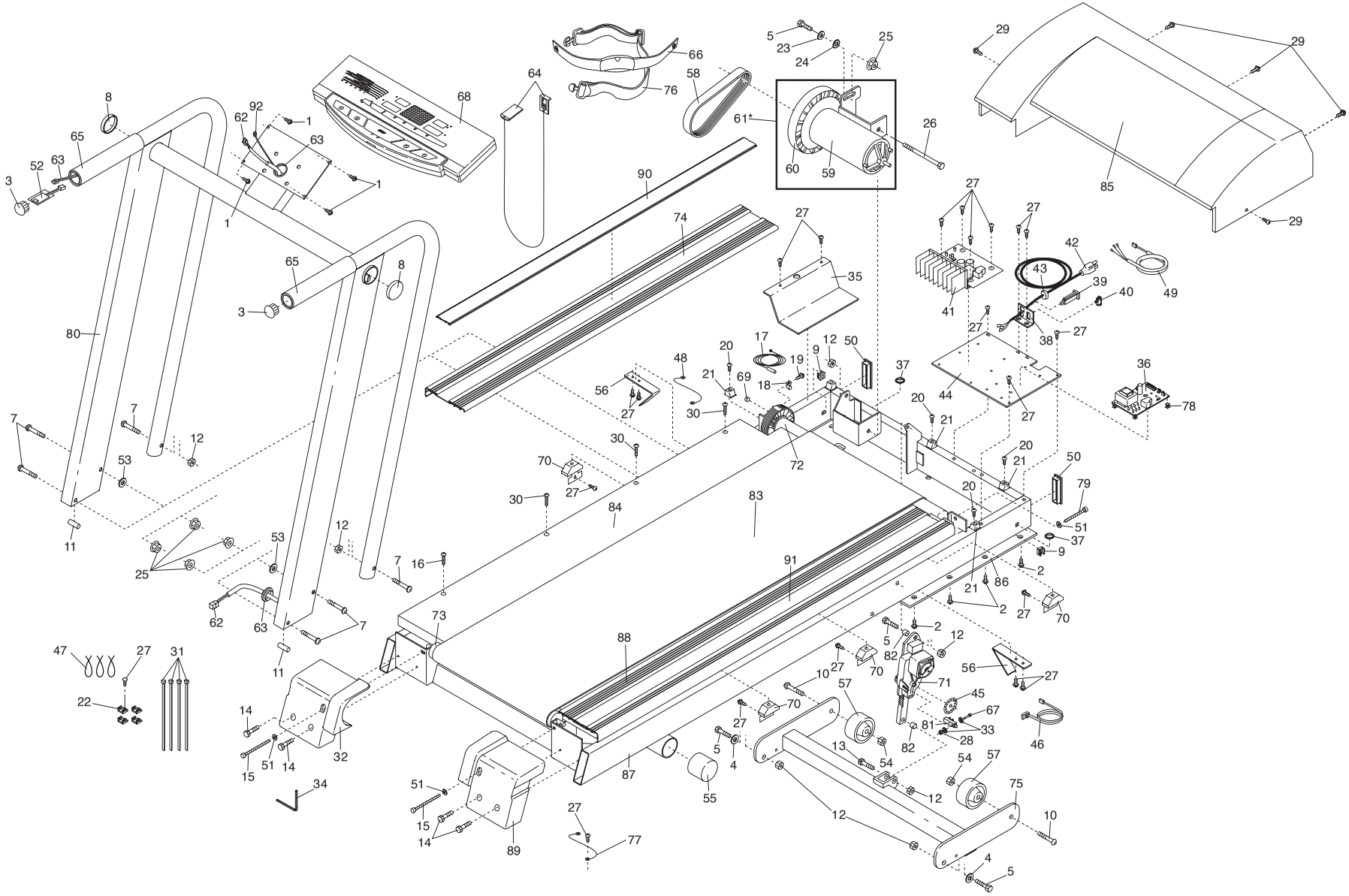
R0900A