EXPLODED DRAWING—Model No. IMTL11995

R0102A

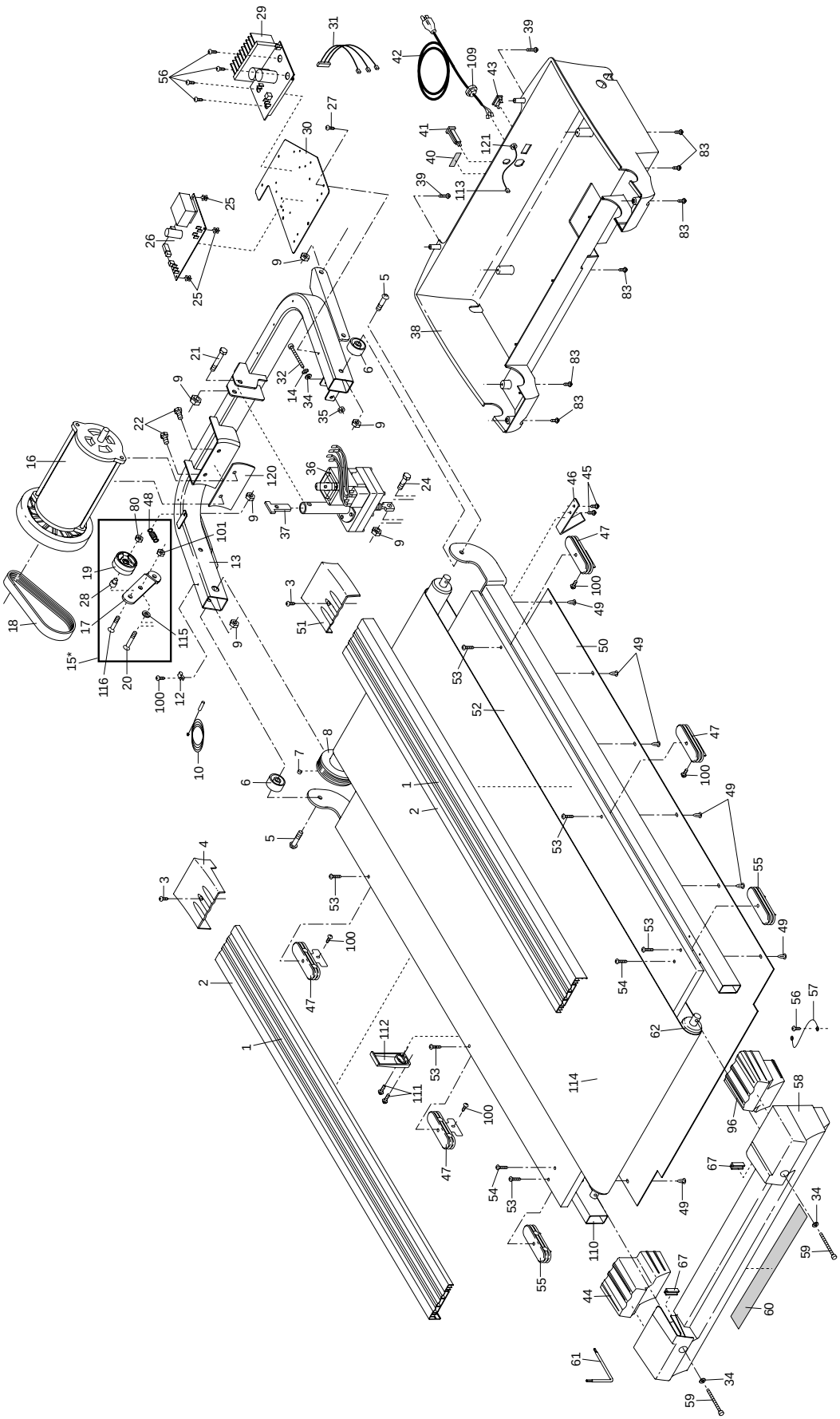

EXPLODED DRAWING—Model No. IMTL11995
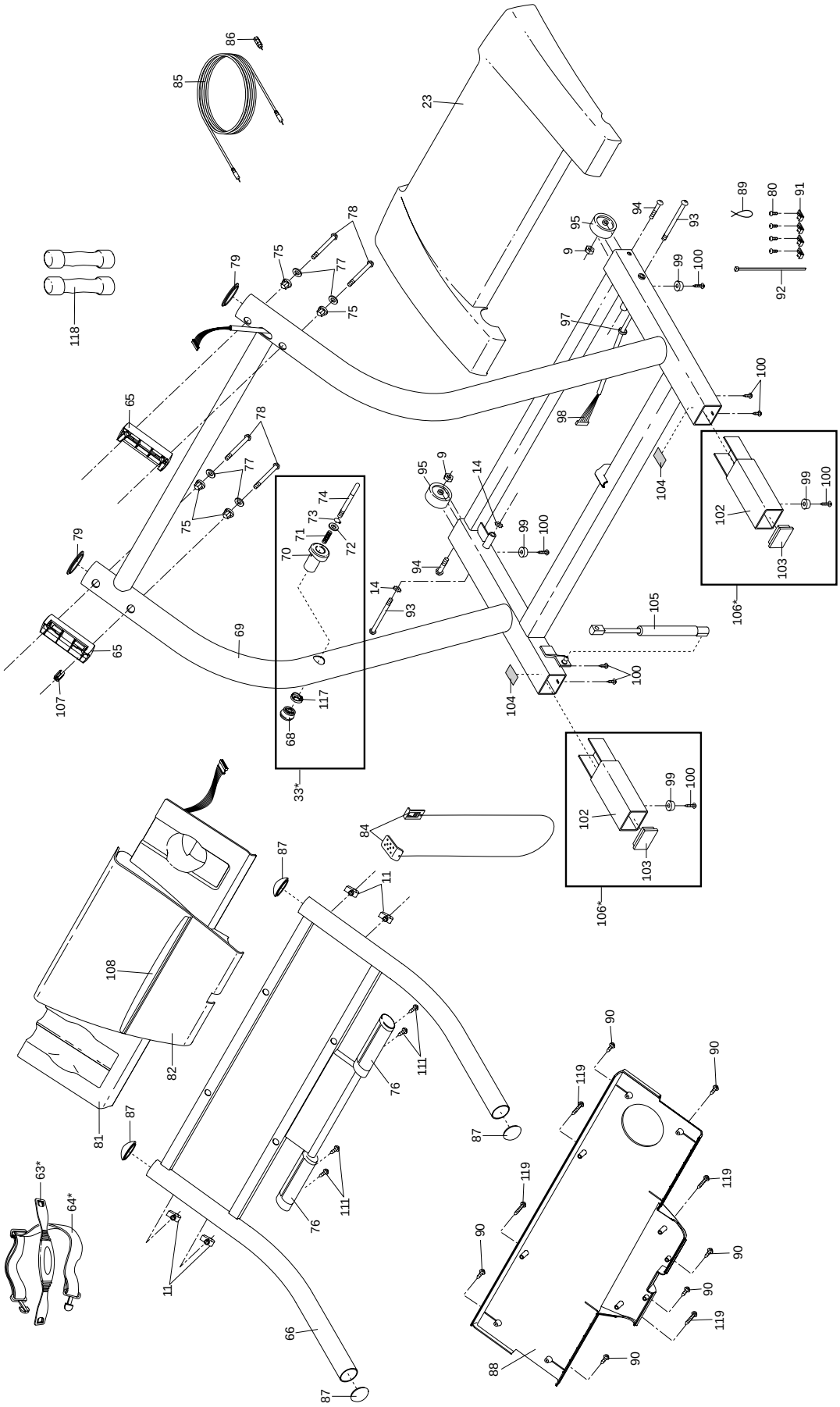
R0102A