EXPLODED DRAWING—Model No. IMTL15993

R1100A

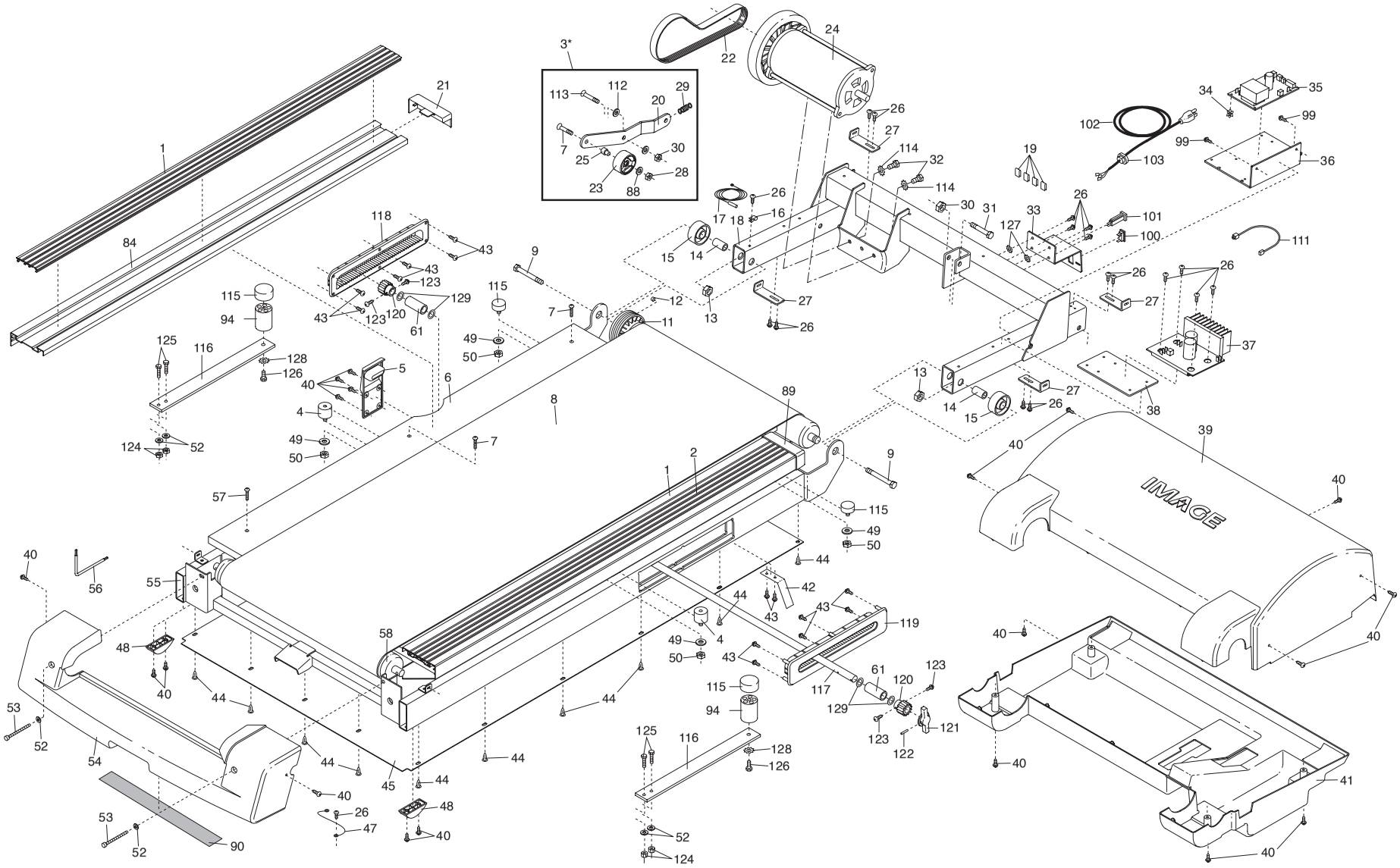

EXPLODED DRAWING—Model No. IMTL15993
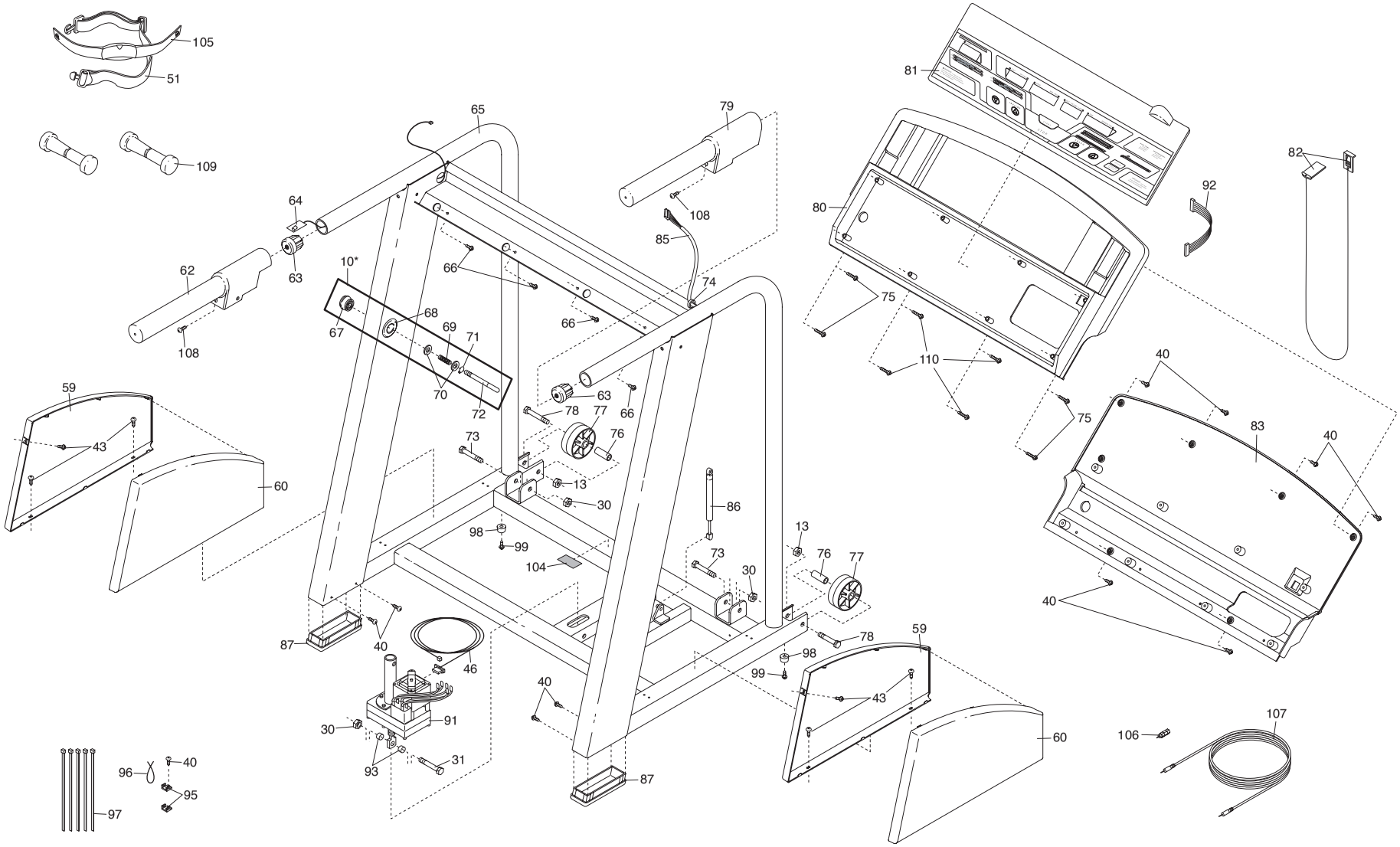
R1100A