EXPLODED DRAWING—Model No. IMTL39525

R0404A

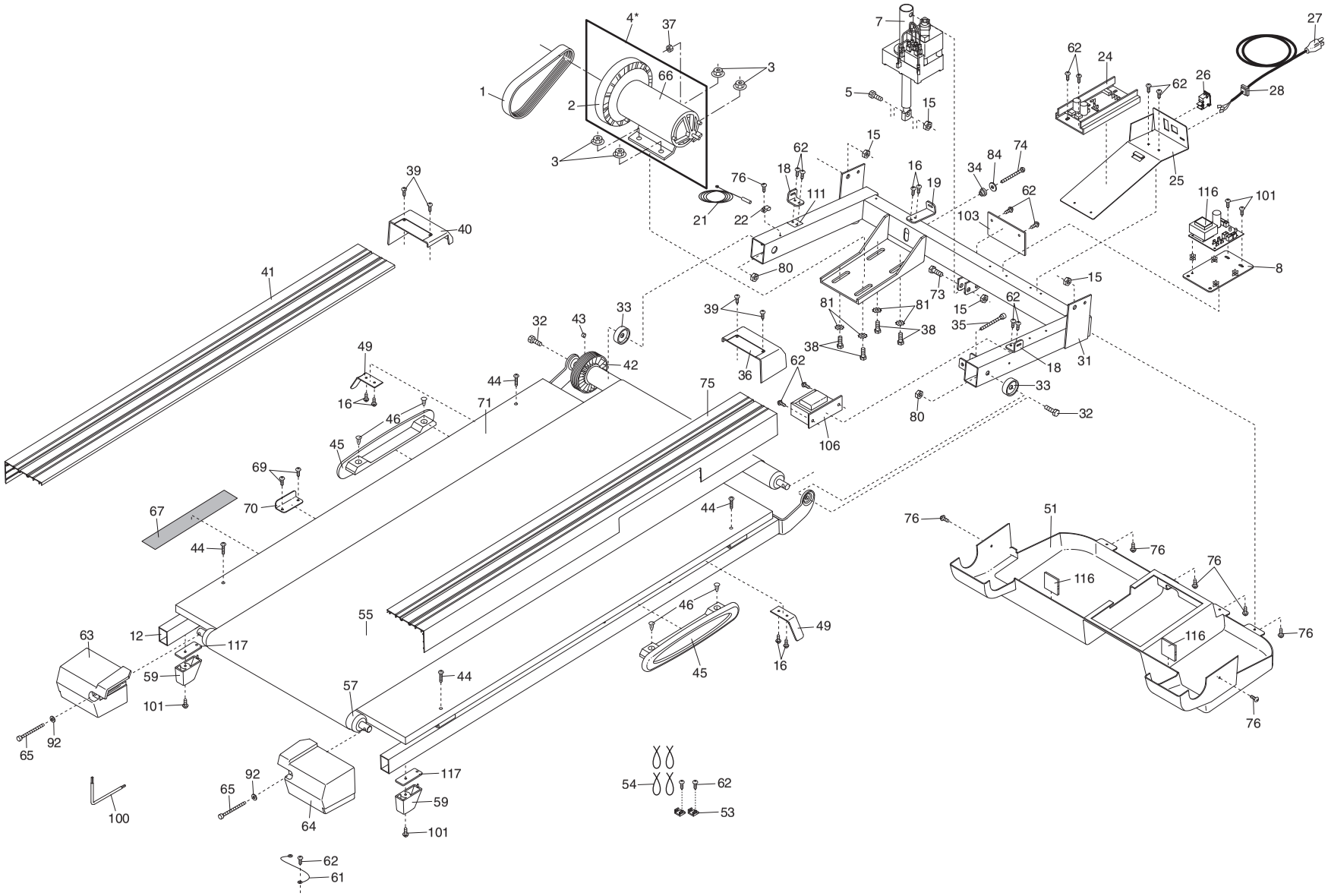

EXPLODED DRAWING—Model No. IMTL39525
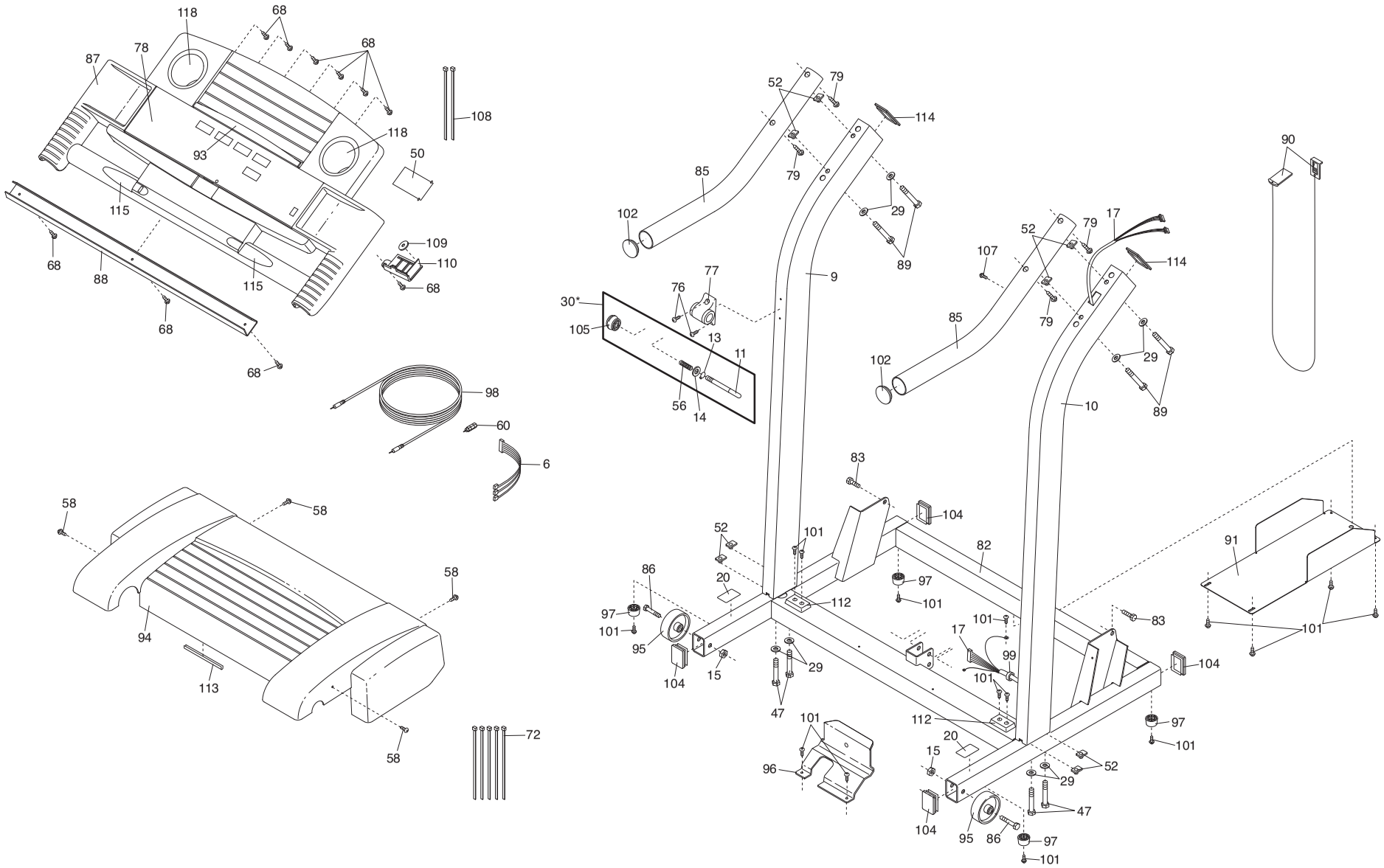
R0404A