Exploded Drawing—Model No. MTSC19800
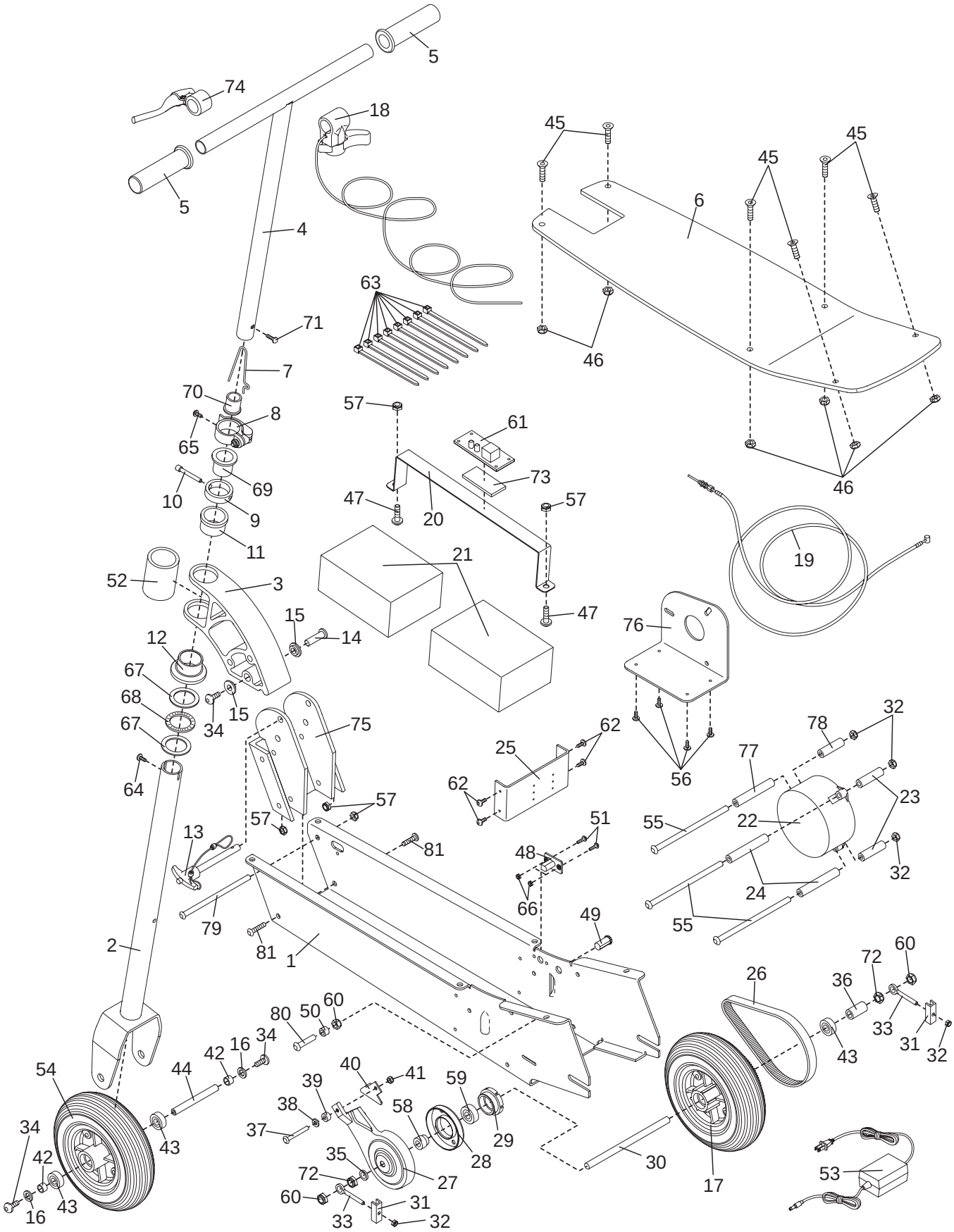
R0601B