EXPLODED DRAWING—Model No. NTCCEX04900
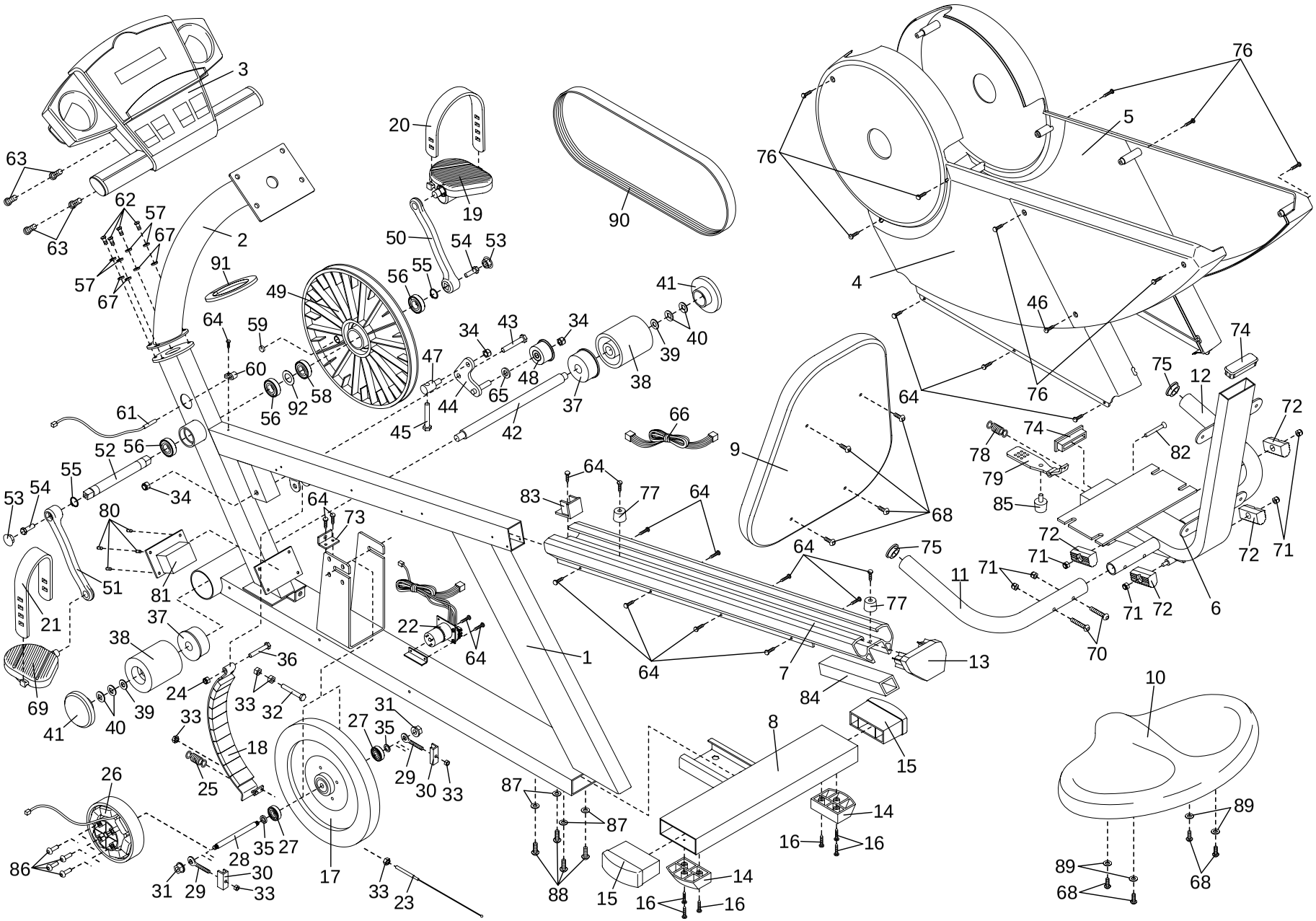
R0601A