EXPLODED DRAWING
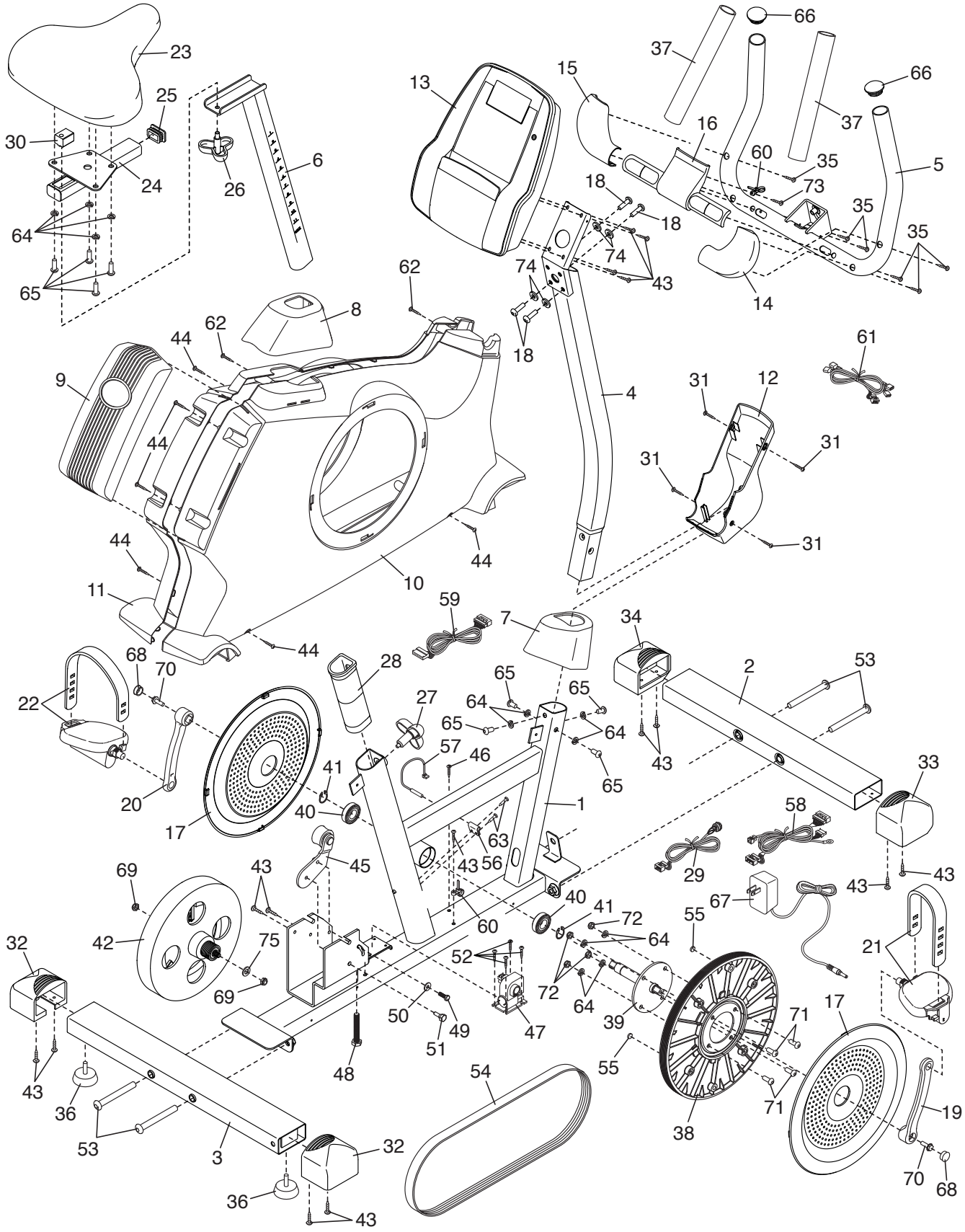
Model No. NTCCEX23012.0 R1012A