EXPLODED DRAWING
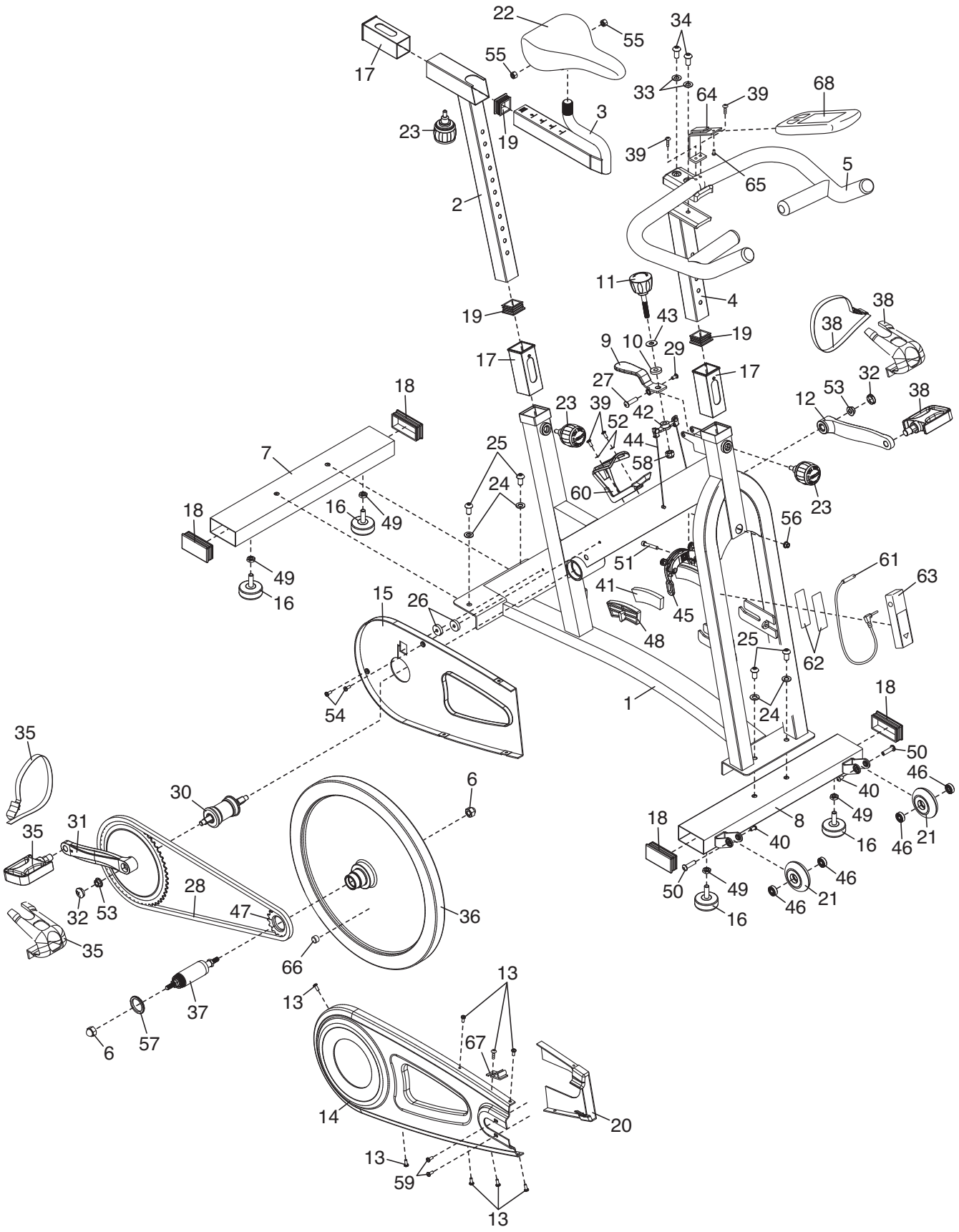
Model No. NTEX04910.1 R1210A