EXPLODED DRAWING
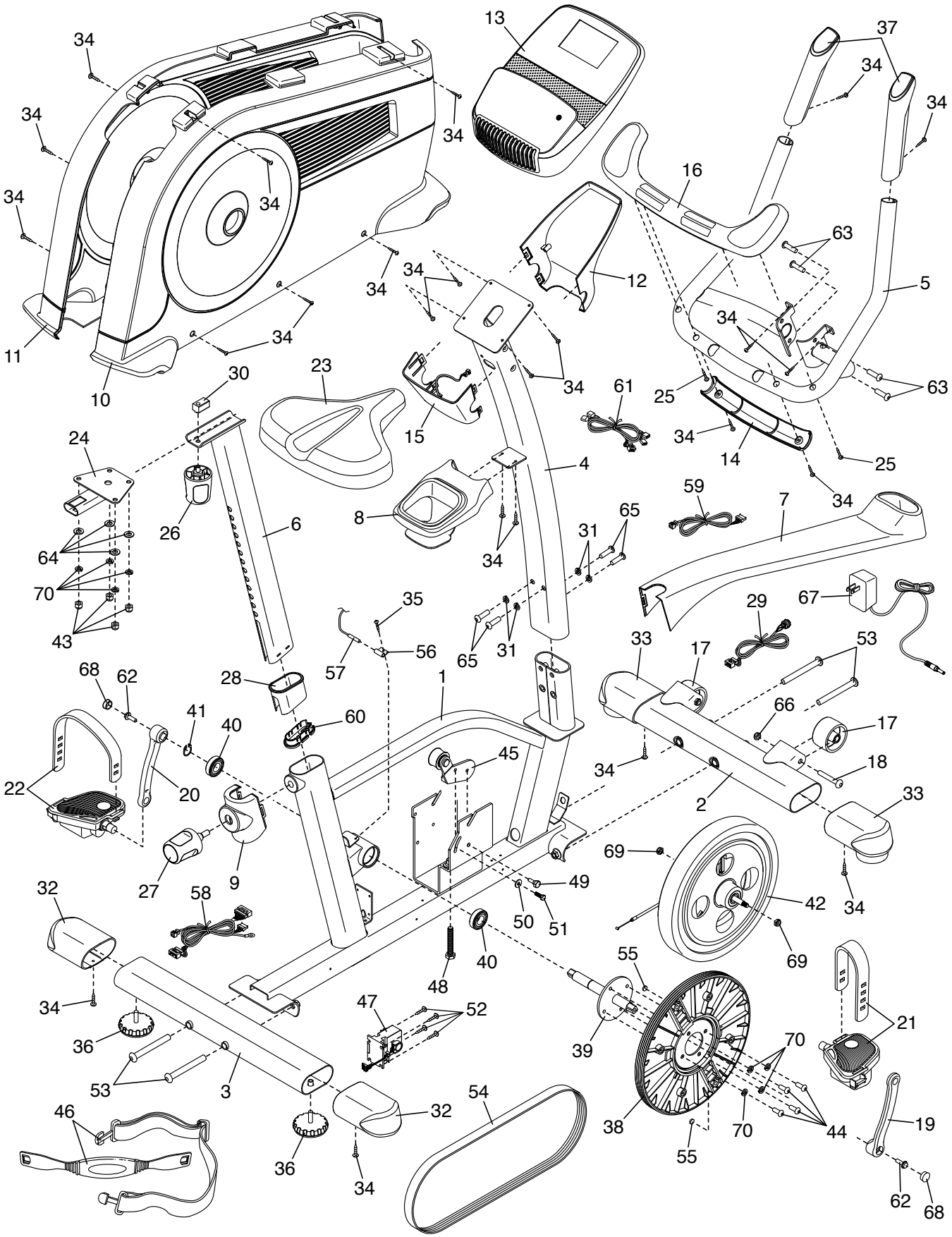
Model No. NTEX05012.0 R0912A