EXPLODED DRAWING
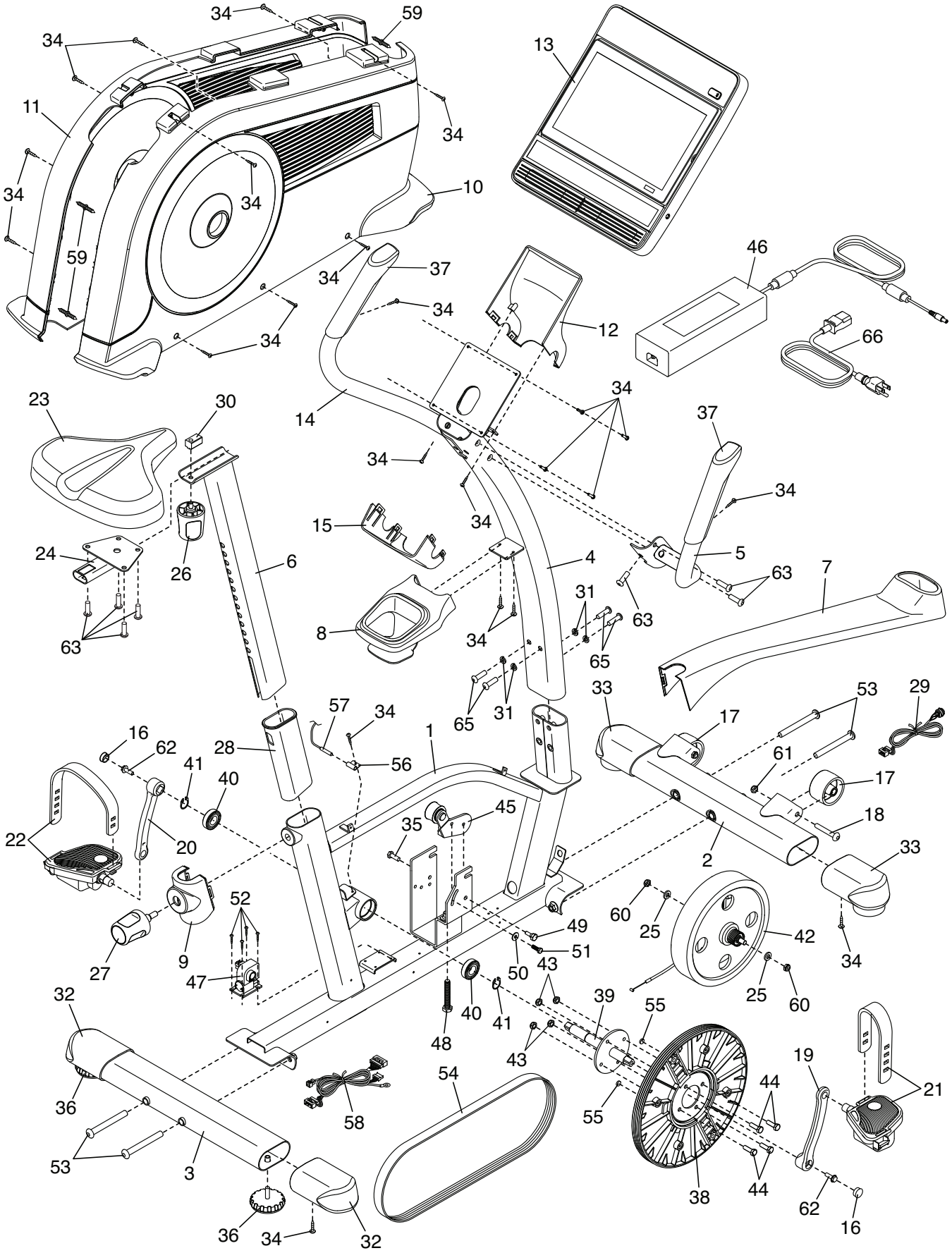
Model No. NTEX12921.2 R0121A