EXPLODED DRAWING
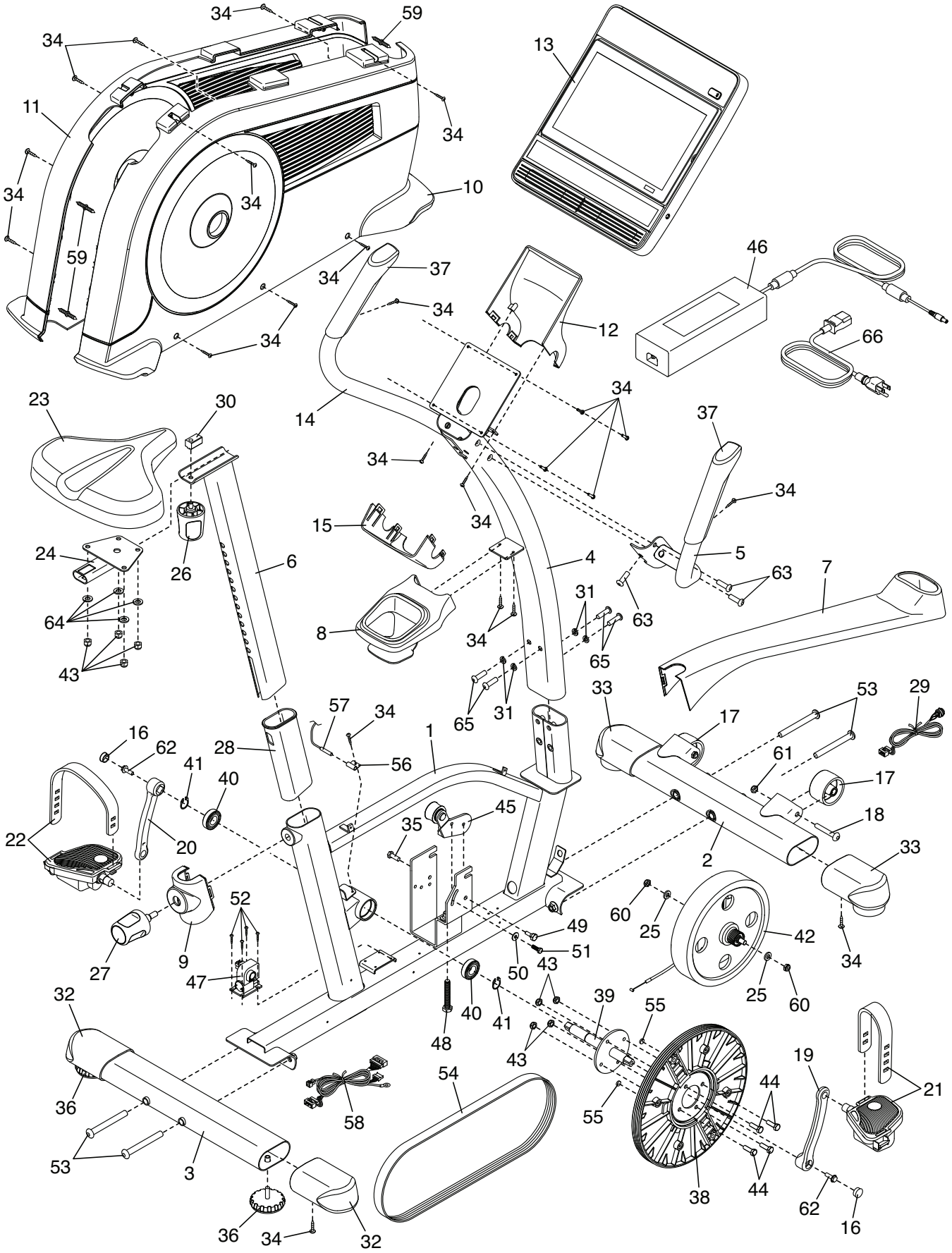
Model No. NTEX12921.3 R0421A